ARCHITECTURAL EXPANSION JOINTS

NORTH AMERICA & EUROPE EDITION



THE NEXUS RANGE

Movement is part of the design.

Nexus architectural expansion joint systems connect the building movement requirement with the floor, wall, ceiling or roof detail. This edition presents the product range in an imperial-first technical format.



SELECT THE ASSEMBLY

APPLICATION

Floor-to-floor, floor-to-wall, wall and corner, ceiling, roof and waterproof joint arrangements.

MOVEMENT

Review the nominal opening together with thermal, seismic and other project movement requirements.

FINISH & SERVICE

Coordinate the exposed finish, installation height, traffic category and accessories with the selected system.

Manufactured by the Specialized / Sigma factories and distributed through Unitech and its affiliates within IKK Group.

READING THIS EDITION

Reading the catalogue.

FRACTIONAL DIMENSIONS

Main dimensions are shown as approximate fractional inches, with the original millimeters in brackets. General dimensions are rounded to the nearest 1/16 in; dimensions below 6 mm and movement values use 1/64 in. Very thin accessory foil may use 1/512 in.

NOMINAL JOINT SIZES

Familiar joint-opening labels such as 1 in [25 mm], 2 in [50 mm] and 4 in [100 mm] are nominal selection labels. They do not redefine the actual opening, fabrication dimension or tested configuration.

MOVEMENT

Signed movement components are converted separately to approximate fractions. Rounding can cause small differences between the displayed total and the sum of its components. Use the original metric values for movement calculations and verification.

MODEL IDENTIFIERS

Model codes, material grades and test-method identifiers are unchanged. Numbers within identifiers are not unit conversions.

DRAWINGS

Original engineering geometry and letter references are retained. Any numerical annotations embedded in the source drawings remain metric; the fractional schedule provides the imperial equivalents.

GOVERNING SOURCE

Original metric values govern manufacture, installation and engineering selection. Fractions are presentation equivalents, not new tolerances or ratings. Source ambiguities are listed in the technical review notes.

SELECTION GUIDANCE

Start with the conditions.

THERMAL MOVEMENT

Temperature changes can expand and contract the building. Establish the minimum, nominal and maximum joint openings.

SEISMIC MOVEMENT

Review the displacement and movement directions required by the project. Compare each selected assembly against the complete movement envelope.

WIND SWAY

Allow for the building movement associated with wind-induced sway, particularly at interfaces and separation joints.

TRAFFIC & LOADING

The source uses pedestrian, private-car and vehicle categories. Confirm actual wheel loads, contact areas, traffic frequency and the selected assembly before specifying.

INSTALLATION & ACCESSORIES

Coordinate recess depth, finished-floor build-up, substrate, fixing arrangement, waterproofing and fire-barrier requirements.

FIND THE SYSTEM

Expansion joint types & model codes.

Expansion joint type	Model code	Joint gap*	Page
Floor-to-floor expansion joint	NF	1 - 1 3/8 in	12
Floor-to-wall expansion joint	NF-C	1 - 1 3/8 in	13
Floor-to-wall expansion joint	NF-D	1 - 1 3/8 in	14
Wall-to-wall expansion joint	NFW	1 - 1 3/8 in	15
Wall-to-corner expansion joint	NFW-C	1 - 1 3/8 in	16
Wall-to-corner expansion joint	NFW-D	1 - 1 3/8 in	17
Floor-to-floor expansion joint	NP	2 - 2 3/4 in	18
Floor-to-wall expansion joint	NP-C	2 - 2 3/4 in	19
Floor-to-wall expansion joint	NP-D	2 - 2 3/4 in	20
Wall-to-wall expansion joint	NPW	2 - 2 3/4 in	21
Wall-to-corner expansion joint	NPW-C	2 - 2 3/4 in	22
Wall-to-corner expansion joint	NPW-D	2 - 2 3/4 in	23
Floor-to-floor expansion joint	NX	2 - 2 3/4 in	24
Floor-to-wall expansion joint	NX-C	2 - 2 3/4 in	25
Floor-to-wall expansion joint	NX-D	2 - 2 3/4 in	26
Floor-to-floor / wall-to-wall / ceiling-to-ceiling expansion joint	FB	1 - 1 3/8 in	27
Floor-to-wall / wall-to-corner / ceiling-to-wall expansion joint	FB-C	1 - 1 3/8 in	28
Floor-to-floor expansion joint	FB-50	2 in	29

* Nominal or approximate gap labels; metric source values govern.

FIND THE SYSTEM

Expansion joint types & model codes.

Expansion joint type	Model code	Joint gap*	Page
Floor-to-wall expansion joint	FB-50C	2 in	30
Floor-to-wall expansion joint	FB-50D	2 in	31
Wall-to-wall / ceiling-to-ceiling expansion joint	FBV-50	2 in	32
Wall-to-corner expansion joint	FBV-50C	2 in	33
Wall-to-corner expansion joint	FBV 50D	2 in	34
Wall-to-wall expansion joint	NMM 25	1 in	35
Wall-to-corner expansion joint	NMM 25C	1 in	36
Floor-to-floor seismic expansion joint	NS	1 - 3 in	37
Floor-to-wall seismic expansion joint	NS-C	1 - 3 in	39
Wall-to-wall seismic expansion joint	NSW	1 - 3 in	41
Wall-to-corner seismic expansion joint	NSW-C	1 - 3 in	43
Floor-to-floor seismic expansion joint	NZ	1 3/8 - 3 in	45
Floor-to-wall seismic expansion joint	NZ-C	1 3/8 - 3 in	46
Floor-to-floor expansion joint	UCP	2 - 8 in	47
Floor-to-wall expansion joint	UCP-C	2 - 8 in	49
Floor-to-floor expansion joint	UCPR	2 - 8 in	51
Floor-to-floor / wall-to-wall expansion joint	UCC	Varies	53
Floor-to-wall / wall-to-corner expansion joint	UCC-C	Varies	54
Wall-to-wall expansion joint	UWC	2 - 6 in	55

* Nominal or approximate gap labels; metric source values govern.

FIND THE SYSTEM

Expansion joint types & model codes.

Expansion joint type	Model code	Joint gap*	Page
Wall-to-corner expansion joint	UWC-C	2 - 6 in	56
Floor-to-floor seismic expansion joint	UFSJ	4 - 16 in	57
Floor-to-wall seismic expansion joint	UFSJ-C	4 - 16 in	59
Floor-to-floor seismic expansion joint	UFSJ-X	4 - 16 in	61
Floor-to-wall seismic expansion joint	UFSJ-XC	4 - 16 in	63
Floor-to-floor seismic expansion joint	NFSJ	1 - 3 in	65
Floor-to-wall seismic expansion joint	NFSJ-C	1 - 3 in	67
Floor-to-floor seismic expansion joint	NFSJ	4 - 16 in	69
Floor-to-wall seismic expansion joint	NFSJ-C	4 - 16 in	71
Floor-to-wall seismic expansion joint	NFSJ-CS	4 - 16 in	73
Floor-to-floor seismic expansion joint	UBSJ	4 - 12 in	75
Floor-to-wall seismic expansion joint	UBSJ-C	4 - 12 in	77
Floor-to-floor expansion joint	NPS	6 - 8 in	79
Floor-to-wall expansion joint	NPS-C	6 - 8 in	80
Floor-to-floor expansion joint	NPS 100	2 - 4 in	81
Floor-to-wall expansion joint	NPS 100C	2 - 3 in	82
Floor-to-floor expansion joint	UPSJ	4 - 12 in	83
Floor-to-wall seismic expansion joint	UPSJ-C	4 - 12 in	85
Floor-to-floor expansion joint	NAC-60	Max 2 3/8 in	87

* Nominal or approximate gap labels; metric source values govern.

FIND THE SYSTEM

Expansion joint types & model codes.

Expansion joint type	Model code	Joint gap*	Page
Floor-to-wall expansion joint	NAC-60C	2 3/8 in	88
Floor-to-floor expansion joint	NAC	Max 4 5/16 - 5 7/8 in	89
Floor-to-wall expansion joint	NAC-C	Max 5 1/16 - 6 9/16 in	90
Floor-to-floor expansion joint	NAF	4 in	91
Floor-to-wall expansion joint	NAF-C	4 in	92
Floor-to-floor expansion joint	NAF	5 13/16 - 7 5/16 in	93
Floor-to-wall expansion joint	NAF-C	5 13/16 - 7 5/16 in	94
Floor-to-floor expansion joint	NFF	2 - 8 in	95
Floor-to-wall expansion joint	NFF-C	2 - 8 in	97
Wall-to-wall expansion joint	NZW	1 3/8 - 3 in	99
Wall-to-corner expansion joint	NZW-C	1 3/8 - 3 in	100
Wall-to-wall expansion joint	UWFJ	4 - 10 in	101
Wall-to-corner expansion joint	UWFJ-C	4 - 10 in	103
Wall-to-wall expansion joint	UWAC	4 - 16 in	105
Wall-to-corner expansion joint	UWAC-C	4 - 16 in	107
Wall-to-wall expansion joint	UWAC-S	4 - 16 in	109
Wall-to-corner expansion joint	UWAC-C S	4 - 16 in	111
Wall-to-wall expansion joint	NWSS	4 - 16 in	113
Wall-to-corner expansion joint	NWSS-C	4 - 16 in	115

* Nominal or approximate gap labels; metric source values govern.

FIND THE SYSTEM

Expansion joint types & model codes.

Expansion joint type	Model code	Joint gap*	Page
Wall-to-wall seismic expansion joint	UWSJ	4 - 16 in	117
Wall-to-corner seismic expansion joint	UWSJ-C	4 - 16 in	119
Wall-to-wall expansion joint	UWXJ	1 - 1 3/8 in	121
Wall-to-corner expansion joint	UWXJ-C	1 - 1 3/8 in	122
Wall-to-wall expansion joint	UWXJ	2 - 4 in	123
Wall-to-wall expansion joint	UWXJ	6 - 8 in	124
Wall-to-wall expansion joint	UWXJ	10 - 12 in	125
For walls and ceilings - normal and corner expansion joint	MMZ	Varies	126
Ceiling - ceiling / gypsum walls expansion joint	NC	1 - 4 in	127
Ceiling-to-wall / gypsum wall-to-corner expansion joint	NC-C	1 - 4 in	129
Aluminum cover plate wall-wall / ceiling-ceiling seismic expansion joint	NAL	1 - 3 in	131
Aluminum cover plate wall-wall / ceiling-ceiling seismic expansion joint	NAL-C	1 - 3 in	132
Ceiling-to-ceiling / wall-to-wall seismic expansion joint	NAL 100	4 - 16 in	133
Ceiling-to-wall / wall-to-corner seismic expansion joint	NAL 100-C	4 - 16 in	135
Roof: floor - floor seismic expansion joint	NR	1 - 3 in	137
Roof: floor - wall seismic expansion joint	NR-C	1 - 3 in	139
Roof: floor - floor seismic expansion joint	NR	4 - 16 in	141
Roof: floor - floor seismic expansion joint	NR-C	4 - 16 in	143

* Nominal or approximate gap labels; metric source values govern.

FIND THE SYSTEM

Expansion joint types & model codes.

Expansion joint type	Model code	Joint gap*	Page
Roof: floor-to-floor seismic expansion joint	URSJ	4 - 16 in	145
Roof: floor-to-wall seismic expansion joint	URSJ-C	4 - 16 in	147
Floor-to-floor expansion joint	UPR-25	1 - 1 3/8 in	149
Floor-to-wall expansion joint	UPR-25C	1 - 1 3/8 in	150
Floor-to-floor expansion joint	UPR-50	2 in	151
Floor-to-wall expansion joint	UPR-50C	2 in	152
Floor-to-floor expansion joint	UPR-75	3 in	153
Floor-to-wall expansion joint	UPR-75C	3 in	154
Floor-to-floor expansion joint	UPR-100	4 in	155
Floor-to-wall expansion joint	UPR-100C	4 in	156
For floors and walls expansion joint	NPR 12.5	Varies	157
Water barrier: floor-to-floor / floor-to-wall	NPR	Varies	158
Floor-to-floor / floor-to-wall expansion joint	NPR 100	4 in	160
Water barrier: floor-to-floor / floor-to-wall	NPR	4 3/4 - 10 in	161
Floor-to-floor expansion joint	NPP	4 - 10 in	163
Floor-to-wall expansion joint	NPP-C	4 - 10 in	165
Floor-to-floor expansion joint	NPPH	4 - 10 in	167
Floor-to-wall expansion joint	NPPH-C	4 - 10 in	169
Waterproof expansion joint membrane system	UWTP	2 - 12 in	171

* Nominal or approximate gap labels; metric source values govern.

FIND THE SYSTEM

Expansion joint types & model codes.

Expansion joint type	Model code	Joint gap*	Page
Waterproof expansion joint intersections	UWTP INTERSECTION	Varies	172
Floor-to-floor waterproof expansion joint	UWTP 50	2 in	173
Floor-to-floor waterproof expansion joint	UWTP 85	3 3/8 in	174
Floor-to-floor waterproof expansion joint	UWTP 100-150	4 - 6 in	175
Floor-to-floor waterproof expansion joint	UWTP 200-250	8 - 10 in	176
Floor-to-floor waterproof expansion joint	UWTP 300	12 in	177
Waterproof corner expansion joint	UWTP-C	2 - 12 in	178
Waterproof corner expansion joint	UWTP-C	2 - 12 in	180

* Nominal or approximate gap labels; metric source values govern.

NF

EXPANSION JOINT FLOOR TO FLOOR 1 - 1 3/8 in [25 - 35 mm] Expansion Joint Width

Surface	Aluminium Strips Rubber Insert
Joint width(s)	1 - 1 3/8 in [25 - 35 mm]
Height(s)	1 3/8 in [35 mm]
Metal type(s)	Aluminium 6063, T6
Seal Color(s)	Black, Grey, Beige, White and Brown
Waterproofing	Moisture barrier



Type	Nominal Joint Width A	Visible Width B	Installation Height C	Total Movement	Load Capacity
NF 25	1 [25]	1 1/8 [29]	1 3/8 [35]	25/64 (±13/64) [10(±5)]	Pedestrian
NF 35	1 3/8 [35]	1 9/16 [39]	1 3/8 [35]	35/64 (±9/32) [14(±7)]	Pedestrian

SECTION DETAIL

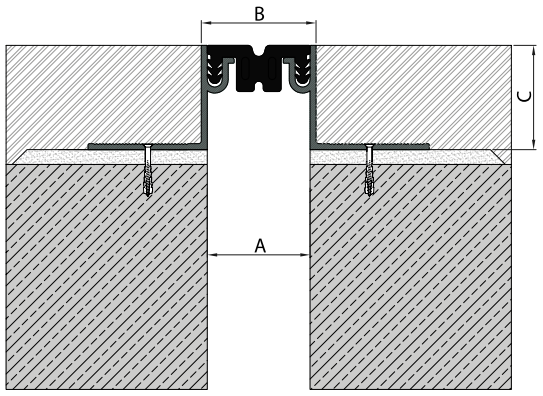

Drawing references correspond to the dimension schedule. Original geometry retained.

Source PDF page 25

NF-C

EXPANSION JOINT FLOOR TO WALL 1 - 1 3/8 in [25 - 35 mm] Expansion Joint Width

Surface	Aluminium Strips Rubber Insert
Joint width(s)	1 - 1 3/8 in [25 - 35 mm]
Height(s)	1 3/8 in [35 mm]
Metal type(s)	Aluminium 6063, T6
Seal Color(s)	Black, Grey, Beige, White and Brown
Waterproofing	Moisture barrier



Type	Nominal Joint Width A	Visible Width B	Installation Height C	Finishing Thickness D	Total Movement	Load Capacity
NF 25C	1 [25]	1 1/8 [29]	1 3/8 [35]	5/8 [16]	25/64 (±13/64) [10(±5)]	Pedestrian
NF 35C	1 3/8 [35]	1 9/16 [39]	1 3/8 [35]	5/8 [16]	35/64 (±9/32) [14(±7)]	Pedestrian

SECTION DETAIL

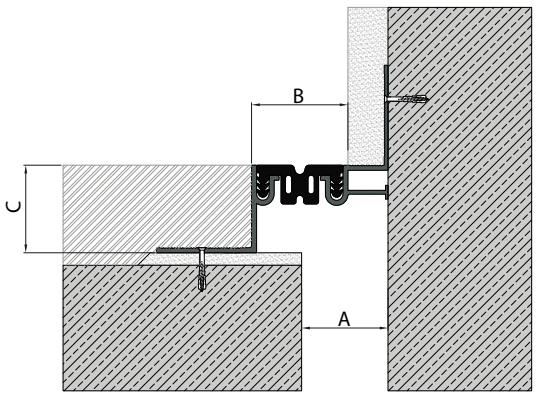

Drawing references correspond to the dimension schedule. Original geometry retained.

Source PDF page 26

NF-D

EXPANSION JOINT FLOOR TO WALL 1 - 1 3/8 in [25 - 35 mm] Expansion Joint Width

Surface	Aluminium Strips Rubber Insert
Joint width(s)	1 - 1 3/8 in [25 - 35 mm]
Height(s)	1 3/8 in [35 mm]
Metal type(s)	Aluminium 6063, T6
Seal Color(s)	Black, Grey, Beige, White and Brown
Waterproofing	Moisture barrier



Type	Nominal Joint Width A	Visible Width B	Installation Height C	Total Movement	Load Capacity
NF 25D	1 [25]	1 1/8 [29]	1 3/8 [35]	25/64 (±13/64) [10(±5)]	Pedestrian
NF 35D	1 3/8 [35]	1 9/16 [39]	1 3/8 [35]	35/64 (±9/32) [14(±7)]	Pedestrian

SECTION DETAIL

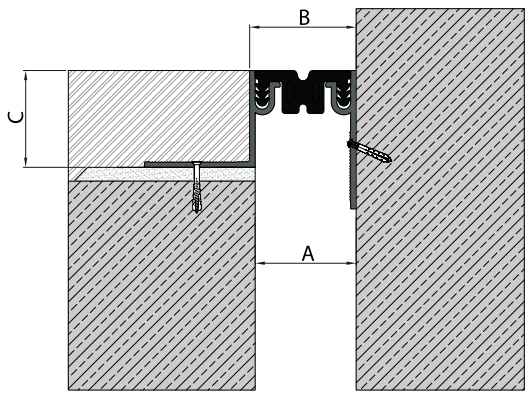

Drawing references correspond to the dimension schedule. Original geometry retained.

Source PDF page 27

NFW

EXPANSION JOINT WALL TO WALL 1 - 1 3/8 in [25 - 35 mm] Expansion Joint Width

Surface	Aluminium Strips Rubber Insert
Joint width(s)	1 - 1 3/8 in [25 - 35 mm]
Height(s)	5/8 in [16 mm]
Metal type(s)	Aluminium 6063, T6
Seal Color(s)	Black, Grey, Beige, White and Brown
Waterproofing	Moisture barrier



Type	Nominal Joint Width A	Visible Width B	Installation Height C	Total Movement
NFW 25	1 [25]	1 1/8 [29]	5/8 [16]	25/64 (±13/64) [10(±5)]
NFW 35	1 3/8 [35]	1 9/16 [39]	5/8 [16]	35/64 (±9/32) [14(±7)]

SECTION DETAIL

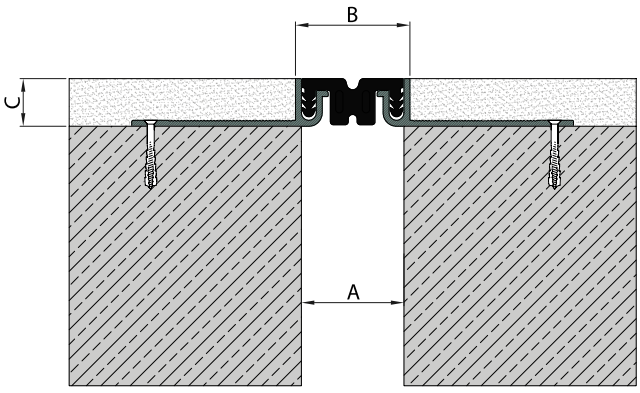

Drawing references correspond to the dimension schedule. Original geometry retained.

Source PDF page 28

NFW-C

EXPANSION JOINT WALL TO CORNER 1 - 1 3/8 in [25 - 35 mm] Expansion Joint Width

Surface	Aluminium Strips Rubber Insert
Joint width(s)	1 - 1 3/8 in [25 - 35 mm]
Height(s)	5/8 in [16 mm]
Metal type(s)	Aluminium 6063, T6
Seal Color(s)	Black, Grey, Beige, White and Brown
Waterproofing	Moisture barrier



Type	Nominal Joint Width A	Visible Width B	Installation Height C	Finishing Thickness D	Total Movement
NFW 25C	1 [25]	1 1/8 [29]	5/8 [16]	5/8 [16]	25/64 (±13/64) [10(±5)]
NFW 35C	1 3/8 [35]	1 9/16 [39]	5/8 [16]	5/8 [16]	35/64 (±9/32) [14(±7)]

SECTION DETAIL

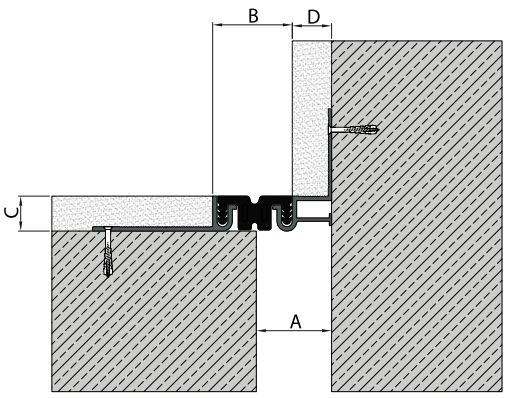

Drawing references correspond to the dimension schedule. Original geometry retained.

Source PDF page 29

NFW-D

EXPANSION JOINT WALL TO CORNER 1 - 1 3/8 in [25 - 35 mm] Expansion Joint Width

Surface	Aluminium Strips Rubber Insert
Joint width(s)	1 - 1 3/8 in [25 - 35 mm]
Height(s)	5/8 in [16 mm]
Metal type(s)	Aluminium 6063, T6
Seal Color(s)	Black, Grey, Beige, White and Brown
Waterproofing	Moisture barrier



Type	Nominal Joint Width A	Visible Width B	Installation Height C	Total Movement
NFW 25D	1 [25]	1 1/8 [29]	5/8 [16]	25/64 (±13/64) [10(±5)]
NFW 35D	1 3/8 [35]	1 9/16 [39]	5/8 [16]	35/64 (±9/32) [14(±7)]

SECTION DETAIL

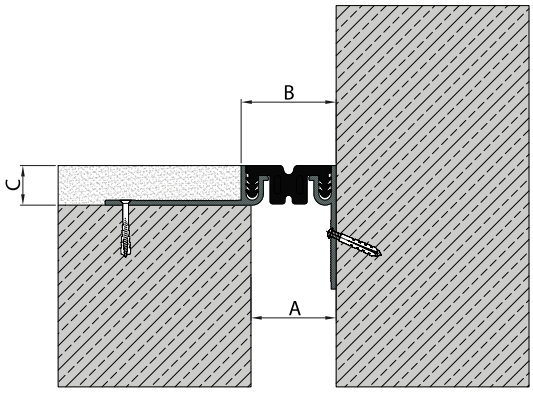

Drawing references correspond to the dimension schedule. Original geometry retained.

Source PDF page 30

NP

EXPANSION JOINT FLOOR TO FLOOR 2-3 in [50-75 mm] Expansion Joint Width

Surface	Aluminium Strips Rubber Insert
Joint width(s)	2-3 in [50-75 mm]
Height(s)	1 3/8 in [35 mm]
Metal type(s)	Aluminium 6063, T6
Seal Color(s)	Black, Grey, Beige, White and Brown
Waterproofing	Moisture barrier

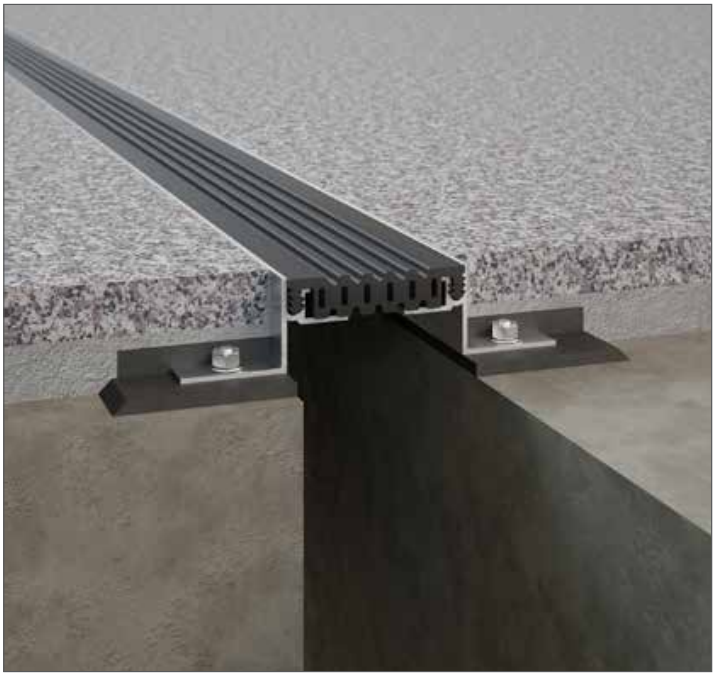

Type	Nominal Joint Width A	Visible Width B	Installation Height C	Total Movement	Load Capacity
NP 55	2 [50]	2 3/16 [55]	1 3/8 [35]	25/32 (±25/64) [20 (±10)]	Pedestrian
NP 75	2 3/4 [70]	2 15/16 [75]	1 3/8 [35]	1 3/16 (±19/32) [30(±15)]	Pedestrian

SECTION DETAIL

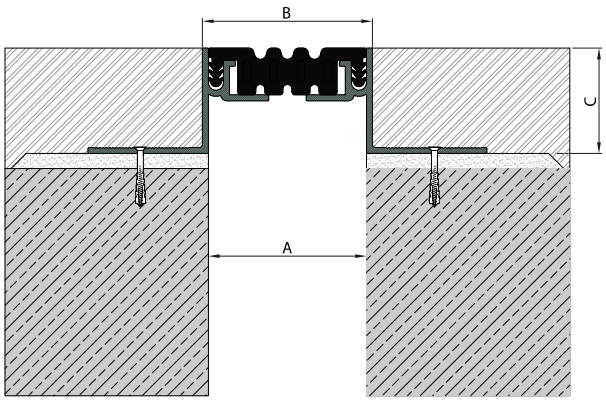

Drawing references correspond to the dimension schedule. Original geometry retained.

Source PDF page 31

NP-C

EXPANSION JOINT FLOOR TO WALL 2-3 in [50-75 mm] Expansion Joint Width

Surface	Aluminium Strips Rubber Insert
Joint width(s)	2-3 in [50-75 mm]
Height(s)	1 3/8 in [35 mm]
Metal type(s)	Aluminium 6063, T6
Seal Color(s)	Black, Grey, Beige, White and Brown
Waterproofing	Moisture barrier



Type	Nominal Joint Width A	Visible Width B	Installation Height C	Finishing Thickness D	Total Movement	Load Capacity
NP 55C	2 [50]	2 3/16 [55]	1 3/8 [35]	5/8 [16]	25/32 (±25/64) [20 (±10)]	Pedestrian
NP 75C	2 3/4 [70]	2 15/16 [75]	1 3/8 [35]	5/8 [16]	1 3/16 (±19/32) [30(±15)]	Pedestrian

SECTION DETAIL

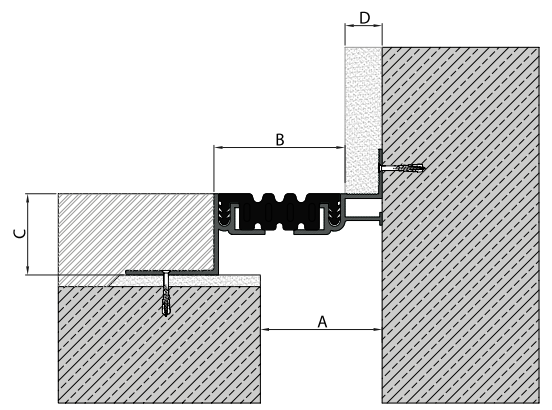

Drawing references correspond to the dimension schedule. Original geometry retained.

Source PDF page 32

NP-D

EXPANSION JOINT FLOOR TO WALL 2-3 in [50-75 mm] Expansion Joint Width

Surface	Aluminium Strips Rubber Insert
Joint width(s)	2-3 in [50-75 mm]
Height(s)	1 3/8 in [35 mm]
Metal type(s)	Aluminium 6063, T6
Seal Color(s)	Black, Grey, Beige, White and Brown
Waterproofing	Moisture barrier



Type	Nominal Joint Width A	Visible Width B	Installation Height C	Total Movement	Load Capacity
NP 55D	2 [50]	2 3/16 [55]	1 3/8 [35]	25/32 (±25/64) [20 (±10)]	Pedestrian
NP 75D	2 3/4 [70]	2 15/16 [75]	1 3/8 [35]	1 3/16 (±19/32) [30(±15)]	Pedestrian

SECTION DETAIL

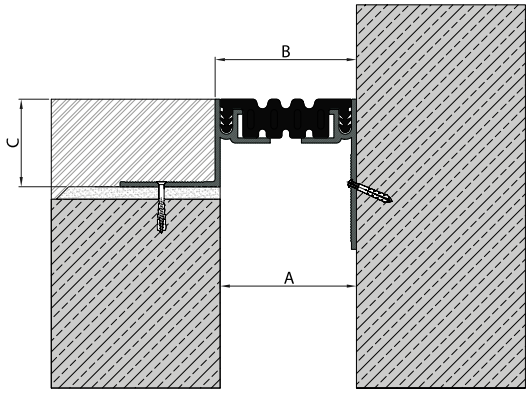

Drawing references correspond to the dimension schedule. Original geometry retained.

Source PDF page 33

NPW

EXPANSION JOINT WALL TO WALL 2-3 in [50-75 mm]
Expansion Joint Width

Surface	Aluminium Strips Rubber Insert
Joint width(s)	2-3 in [50-75 mm]
Height(s)	5/8 in [16 mm]
Metal type(s)	Aluminium 6063, T6
Seal Color(s)	Black, Grey, Beige, White and Brown
Waterproofing	Moisture barrier

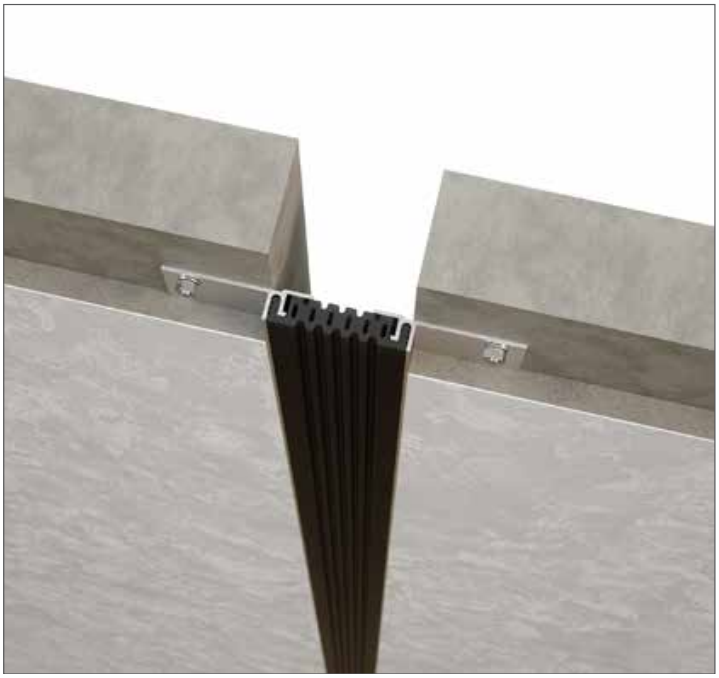

Type	Nominal Joint Width A	Visible Width B	Installation Height C	Total Movement
NPW 55	2 [50]	2 3/16 [55]	5/8 [16]	25/32 (±25/64) [20(±10)]
NPW 75	2 3/4 [70]	2 15/16 [75]	5/8 [16]	1 3/16 (±19/32) [30(±15)]

SECTION DETAIL

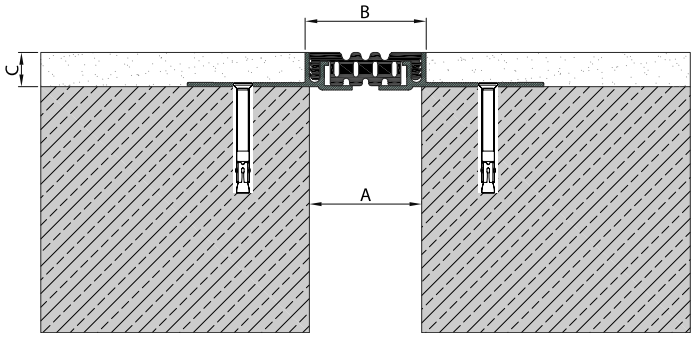

Drawing references correspond to the dimension schedule. Original geometry retained.

Source PDF page 34

NPW-C

EXPANSION JOINT WALL TO CORNER 2-3 in [50-75 mm] Expansion Joint Width

Surface	Aluminium Strips Rubber Insert
Joint width(s)	2-3 in [50-75 mm]
Height(s)	5/8 in [16 mm]
Metal type(s)	Aluminium 6063, T6
Seal Color(s)	Black, Grey, Beige, White and Brown
Waterproofing	Moisture barrier



Type	Nominal Joint Width A	Visible Width B	Installation Height C	Finishing Thickness D	Total Movement
NPW 55C	2 [50]	2 3/16 [55]	5/8 [16]	5/8 [16]	25/32 (±25/64) [20 (±10)]
NPW 75C	2 3/4 [70]	2 15/16 [75]	5/8 [16]	5/8 [16]	1 3/16 (±19/32) [30(±15)]

SECTION DETAIL

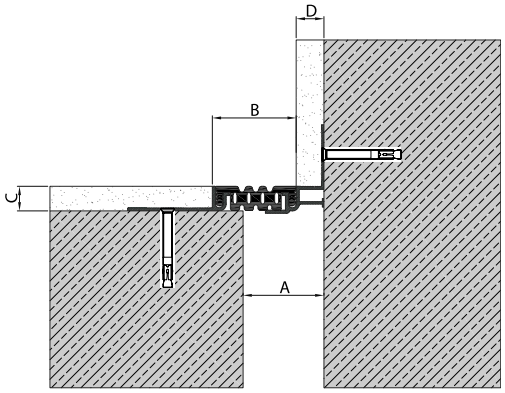

Drawing references correspond to the dimension schedule. Original geometry retained.

Source PDF page 35

NPW-D

EXPANSION JOINT WALL TO CORNER 2-3 in [50-75 mm] Expansion Joint Width

Surface	Aluminium Strips Rubber Insert
Joint width(s)	2-3 in [50-75 mm]
Height(s)	5/8 in [16 mm]
Metal type(s)	Aluminium 6063, T6
Seal Color(s)	Black, Grey, Beige, White and Brown
Waterproofing	Moisture barrier



Type	Nominal Joint Width A	Visible Width B	Installation Height C	Total Movement
NPW 55D	2 [50]	2 3/16 [55]	5/8 [16]	25/32 (±25/64) [20(±10)]
NPW 75D	2 3/4 [70]	2 15/16 [75]	5/8 [16]	1 3/16 (±19/32) [30(±15)]

SECTION DETAIL

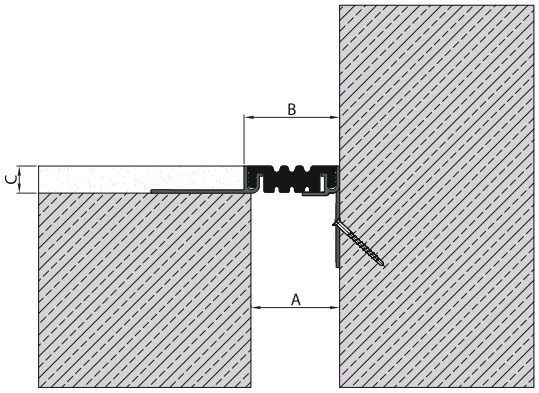

Drawing references correspond to the dimension schedule. Original geometry retained.

Source PDF page 36

NX

EXPANSION JOINT FLOOR TO FLOOR 2-3 in [50-75 mm] Expansion Joint Width

Surface	Aluminium Strips Rubber Insert
Joint width(s)	2-3 in [50-75 mm]
Height(s)	1 9/16 in [40 mm]
Metal type(s)	Aluminium 6063, T6
Seal Color(s)	Black, Grey, Beige, White and Brown
Waterproofing	Moisture barrier



Type	Nominal Joint Width A	Visible Width B	Installation Height C	Total Movement	Load Capacity
NX 55	2 [50]	2 3/16 [55]	1 9/16 [40]	25/32 (±25/64) [20 (±10)]	Pedestrian
NX 75	2 3/4 [70]	2 15/16 [75]	1 9/16 [40]	1 3/16 (±19/32) [30(±15)]	Pedestrian

SECTION DETAIL

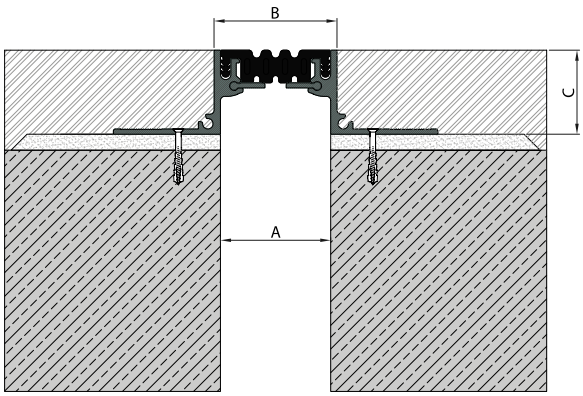

Drawing references correspond to the dimension schedule. Original geometry retained.

Source PDF page 37

NX-C

EXPANSION JOINT FLOOR TO WALL 2-3 in [50-75 mm] Expansion Joint Width

Surface	Aluminium Strips Rubber Insert
Joint width(s)	2-3 in [50-75 mm]
Height(s)	1 9/16 in [40 mm]
Metal type(s)	Aluminium 6063, T6
Seal Color(s)	Black, Grey, Beige, White and Brown
Waterproofing	Moisture barrier



Type	Nominal Joint Width A	Visible Width B	Installation Height C	Finishing Thickness D	Total Movement	Load Capacity
NX 55C	2 [50]	2 3/16 [55]	1 9/16 [40]	5/8 [16]	25/32 (±25/64) [20 (±10)]	Pedestrian
NX 75C	2 3/4 [70]	2 15/16 [75]	1 9/16 [40]	5/8 [16]	1 3/16 (±19/32) [30(±15)]	Pedestrian

SECTION DETAIL

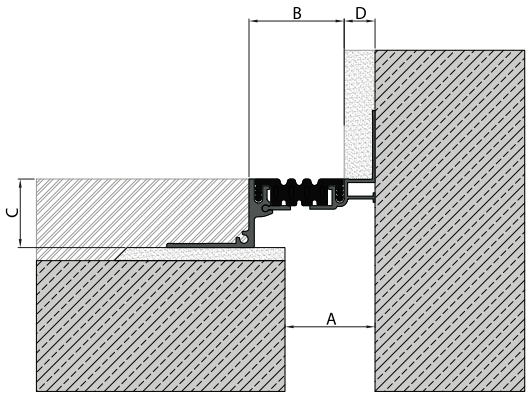

Drawing references correspond to the dimension schedule. Original geometry retained.

Source PDF page 38

NX-D

EXPANSION JOINT FLOOR TO WALL 2-3 in [50-75 mm] Expansion Joint Width

Surface	Aluminium Strips Rubber Insert
Joint width(s)	2-3 in [50-75 mm]
Height(s)	1 9/16 in [40 mm]
Metal type(s)	Aluminium 6063, T6
Seal Color(s)	Black, Grey, Beige, White and Brown
Waterproofing	Moisture barrier



Type	Nominal Joint Width A	Visible Width B	Installation Height C	Total Movement	Load Capacity
NX 55D	2 [50]	2 3/16 [55]	1 9/16 [40]	25/32 (±25/64) [20 (±10)]	Pedestrian
NX 75D	2 3/4 [70]	2 15/16 [75]	1 9/16 [40]	1 3/16 (±19/32) [30(±15)]	Pedestrian

SECTION DETAIL

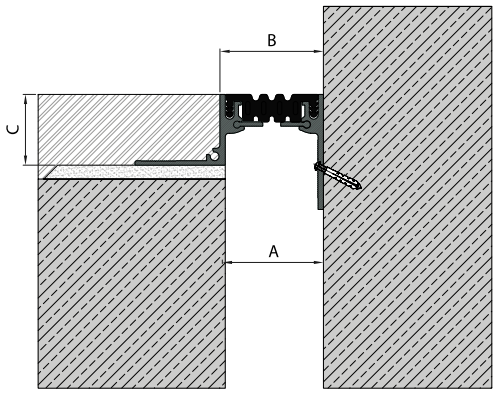

Drawing references correspond to the dimension schedule. Original geometry retained.

Source PDF page 39

FB

EXPANSION JOINT FLOOR TO FLOOR & WALL TO WALL & CEILING TO CEILING 1-1 3/8 in [25-35 mm] Expansion Joint Width

Surface	Aluminium Strips Rubber Insert
Joint width(s)	1-1 3/8 in [25-35 mm]
Height(s)	5/64 in [2 mm]
Metal type(s)	Aluminium 6063, T6
Seal Color(s)	Black, Grey, Beige, White and Brown
Waterproofing	Moisture barrier



Type	Nominal Joint Width A	Visible Width B	Installation Height C	Total Movement	Load Capacity
FB 25	1 [25]	4 9/16 [116]	5/64 [2]	25/64 (±13/64) [10(±5.0)]	Pedestrian
FB 35	1 3/8 [35]	4 15/16 [126]	5/64 [2]	19/32 (±19/64) [15(±7.5)]	Pedestrian

SECTION DETAIL

FB 25

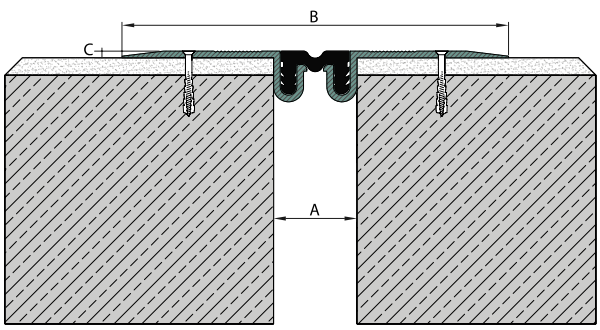

FB 35

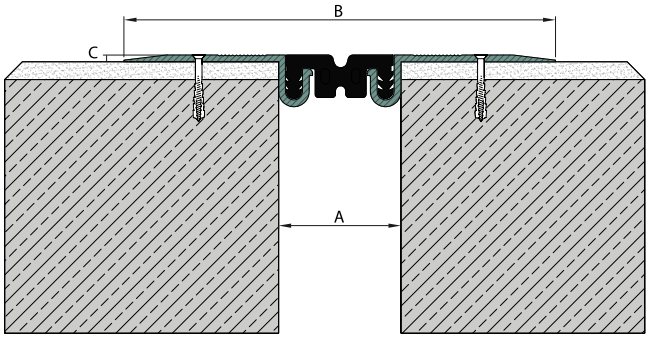

Drawing references correspond to the dimension schedule. Original geometry retained.

Source PDF page 40

FB-C

EXPANSION JOINT FLOOR TO WALL & WALL TO CORNER & CEILING TO WALL 1-1 3/8 in [25-35 mm] Expansion Joint Width

Surface	Aluminium Strips Rubber Insert
Joint width(s)	1-1 3/8 in [25-35 mm]
Height(s)	5/64 in [2 mm]
Metal type(s)	Aluminium 6063, T6
Seal Color(s)	Black, Grey, Beige, White and Brown
Waterproofing	Moisture barrier



Type	Nominal Joint Width A	Visible Width B	Installation Height C	Total Movement	Load Capacity
FB 25C	1 [25]	2 3/4 [70]	1 5/8 [42]	25/64 (±13/64) [10(±5.0)]	Pedestrian
FB 35C	1 3/8 [35]	3 1/8 [80]	1 5/8 [42]	19/32 (±19/64) [15(±7.5)]	Pedestrian

SECTION DETAIL

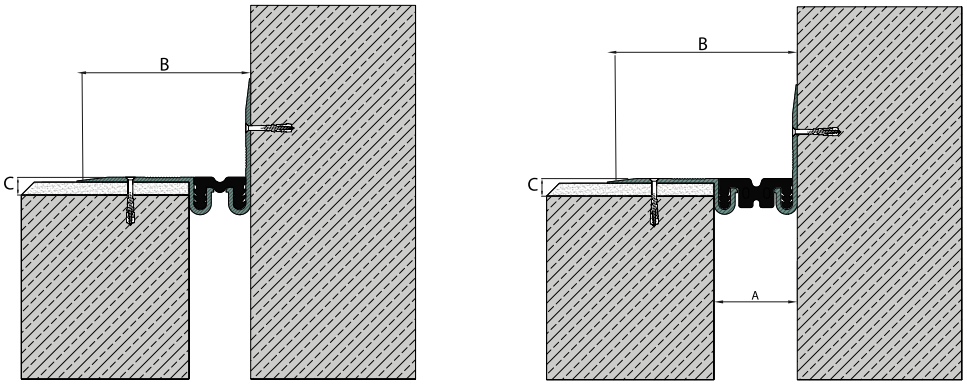

Drawing references correspond to the dimension schedule. Original geometry retained.

Source PDF page 41

FB-50

EXPANSION JOINT FLOOR TO FLOOR 2 in [50 mm]
Expansion Joint Width

Surface	Aluminium Strips Rubber Insert
Joint width(s)	2 in [50 mm]
Height(s)	13/64 in [5 mm]
Metal type(s)	Aluminium 6063, T6
Seal Color(s)	Black, Grey, Beige
Waterproofing	Moisture barrier



Type	Nominal Joint Width A	Visible Width B	Installation Height C	Total Movement	Load Capacity
FB 50	2 [50]	6 11/16 [170]	13/64 [5]	25/32 (±25/64) [20 (±10)]	Vehicle

SECTION DETAIL

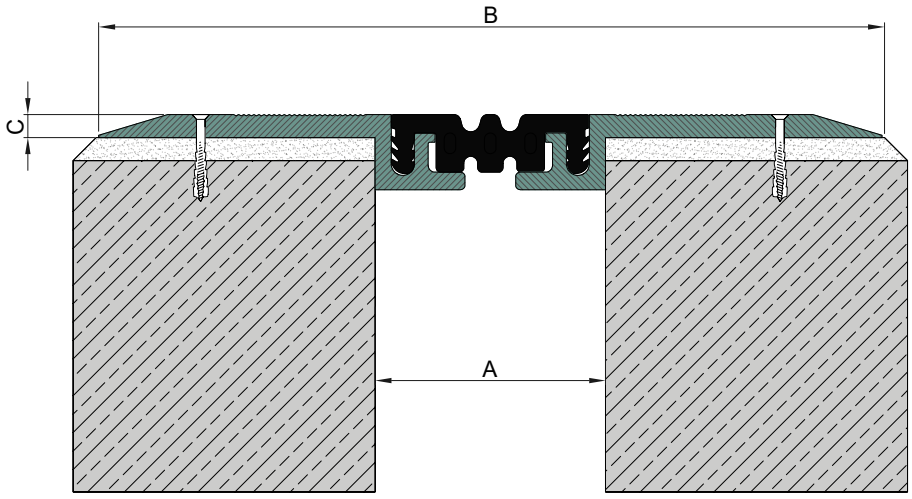

Drawing references correspond to the dimension schedule. Original geometry retained.

Source PDF page 42

FB-50C

EXPANSION JOINT FLOOR TO WALL 2 in [50 mm]
Expansion Joint Width

Surface	Aluminium Strips Rubber Insert
Joint width(s)	2 in [50 mm]
Height(s)	13/64 in [5 mm]
Metal type(s)	Aluminium 6063, T6
Seal Color(s)	Black, Grey, Beige
Waterproofing	Moisture barrier



Type	Nominal Joint Width A	Visible Width B	Installation Height C	Visible Height D	Total Movement	Load Capacity
FB 50C	2 [50]	4 5/16 [110]	13/64 [5]	2 3/16 [55]	25/32 (±25/64) [20(±10)]	Vehicle

SECTION DETAIL

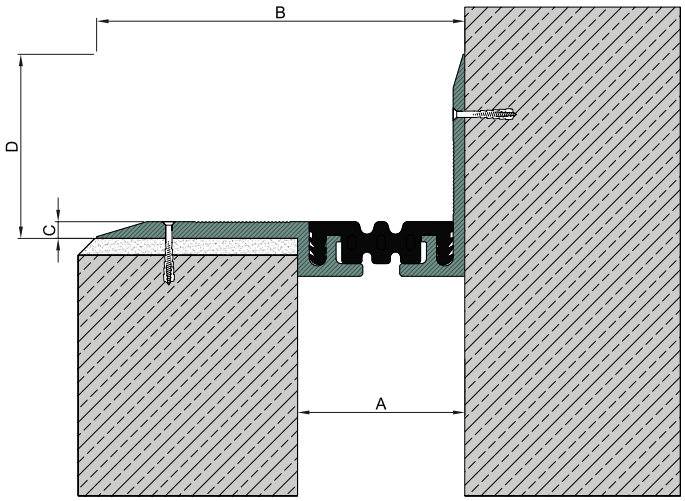

Drawing references correspond to the dimension schedule. Original geometry retained.

Source PDF page 43

FB-50D

EXPANSION JOINT FLOOR TO WALL 2 in [50 mm]
Expansion Joint Width

Surface	Aluminium Strips Rubber Insert
Joint width(s)	2 in [50 mm]
Height(s)	13/64 in [5 mm]
Metal type(s)	Aluminium 6063, T6
Seal Color(s)	Black, Grey, Beige, White and Brown
Waterproofing	Moisture barrier



Type	Nominal Joint Width A	Visible Width B	Installation Height C	Total Movement	Load Capacity
FB 50D	2 [50]	4 5/16 [110]	13/64 [5]	25/32 (±25/64) [20 (±10)]	Vehicle

SECTION DETAIL

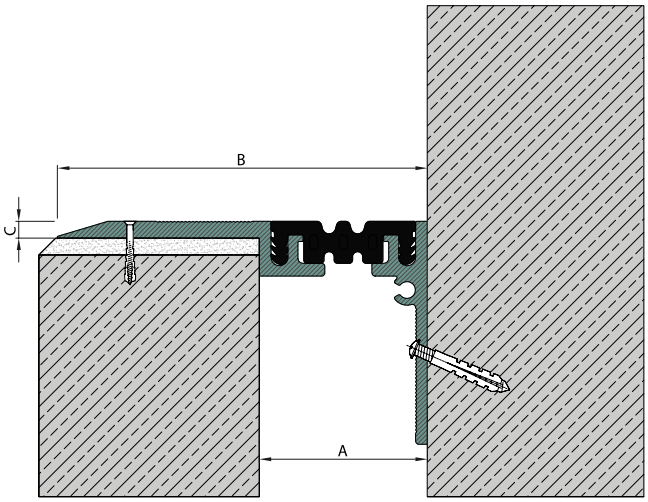

Drawing references correspond to the dimension schedule. Original geometry retained.

Source PDF page 44

FBV-50

EXPANSION JOINT WALL TO WALL; CEILING TO CEILING 2 in [50 mm] Expansion Joint Width

Surface	Aluminium Strips Rubber Insert
Joint width(s)	2 in [50 mm]
Height(s)	13/64 in [5 mm]
Metal type(s)	Aluminium 6063, T6
Seal Color(s)	Black, Grey, Beige, White and Brown
Waterproofing	Moisture barrier



Type	Nominal Joint Width A	Visible Width B	Installation Height C	Total Movement
FBV 50	2 [50]	6 11/16 [170]	3/32 [2.5]	25/32 (±25/64) [20(±10)]

SECTION DETAIL

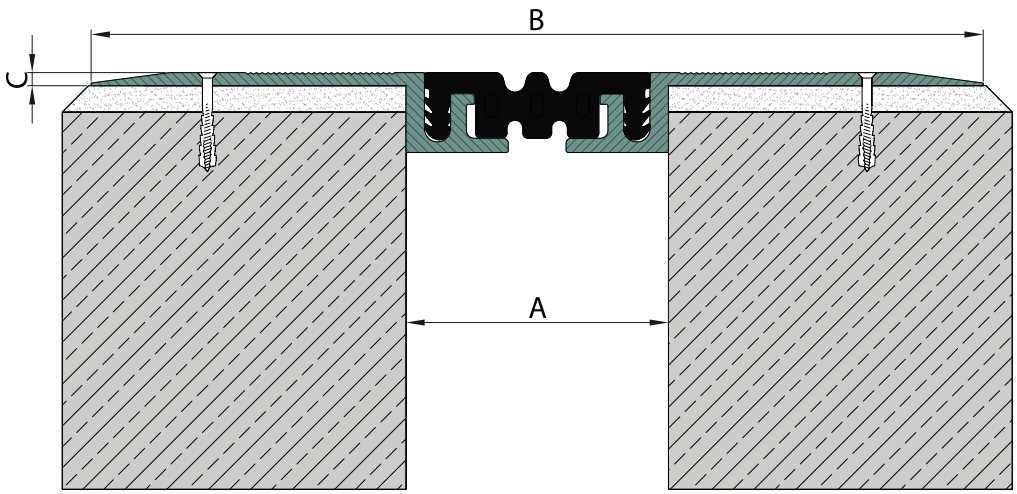

Drawing references correspond to the dimension schedule. Original geometry retained.

Source PDF page 45

FBV-50C

EXPANSION JOINT WALL TO CORNER 2 in [50 mm]
Expansion Joint Width

Surface	Aluminium Strips Rubber Insert
Joint width(s)	2 in [50 mm]
Height(s)	3/32 in [2.5 mm]
Metal type(s)	Aluminium 6063, T6
Seal Color(s)	Black, Grey, Beige, White and Brown
Waterproofing	Moisture barrier



Type	Nominal Joint Width A	Visible Width B	Installation Height C	Total Movement
FBV 50C	2 [50]	4 5/16 [110]	13/64 [5]	25/32 (±25/64) [20(±10)]

SECTION DETAIL

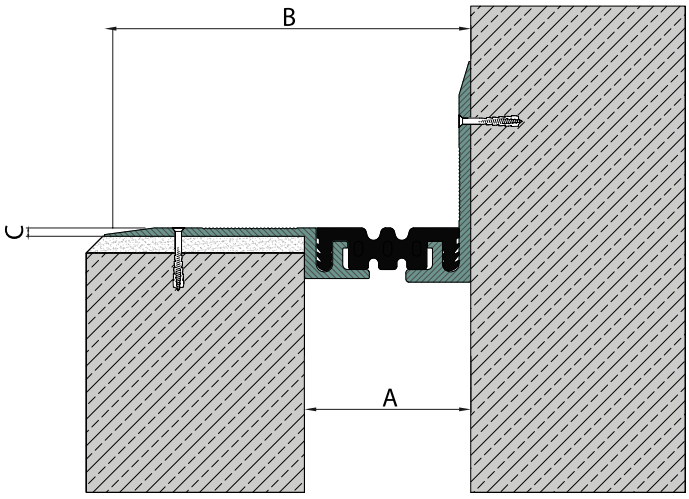

Drawing references correspond to the dimension schedule. Original geometry retained.

Source PDF page 46

FBV 50D

EXPANSION JOINT WALL TO CORNER 2 in [50 mm]
Expansion Joint Width

Surface	Aluminium Strips Rubber Insert
Joint width(s)	2 in [50 mm]
Height(s)	3/32 in [2.5 mm]
Metal type(s)	Aluminium 6063, T6
Seal Color(s)	Black, Grey, Beige, White and Brown
Waterproofing	Moisture barrier



Type	Nominal Joint Width A	Visible Width B	Installation Height c	Total Movement
FBV 50D	2 [50]	4 5/16 [110]	13/64 [5]	25/32 (±25/64) [20(±10)]

SECTION DETAIL

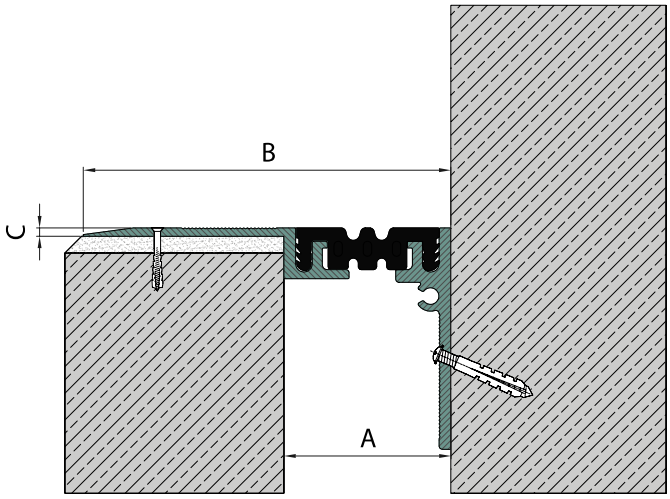

Drawing references correspond to the dimension schedule. Original geometry retained.

Source PDF page 47

NMM 25

EXPANSION JOINT WALL TO WALL 1 in [25 mm]
Expansion Joint Width

Surface	Aluminum
Gap width(s)	1 in [25 mm]
Height(s)	9/16 in [13.5 mm]
Metal type(s)	Aluminium 6063, T6
Seal Color(s)	Black
Waterproofing	Moisture barrier



Type	Nominal Joint Width A	Visible Width B	Installation Height C	Total Movement
NMM 25	1 [25]	1 1/4 [31.5]	9/16 [13.5]	1 3/16 (+25/64-25/32) [30 (+10-20)]

SECTION DETAIL

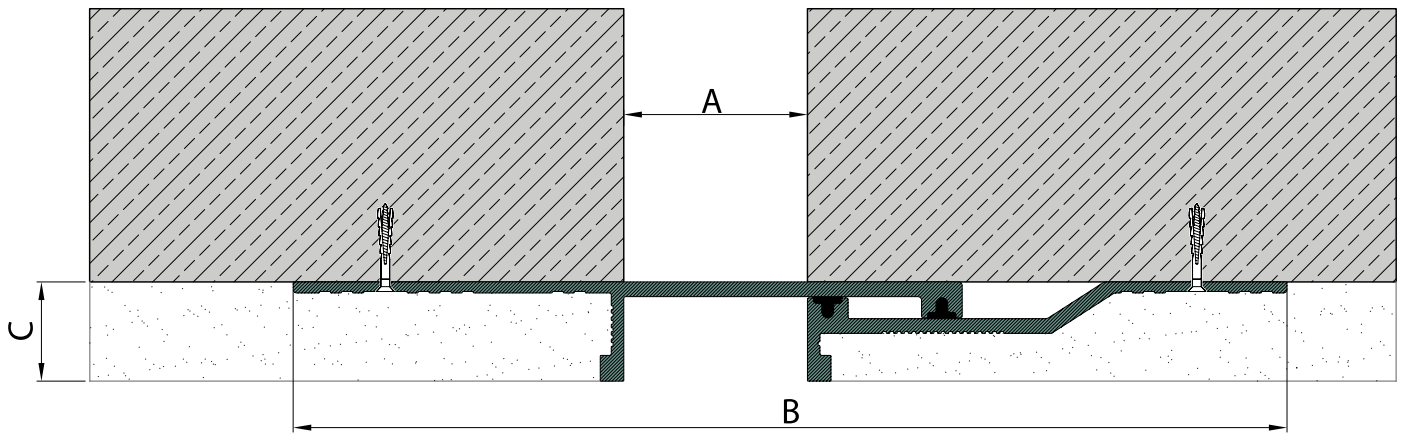

Drawing references correspond to the dimension schedule. Original geometry retained.

Source PDF page 48

NMM 25C

EXPANSION JOINT WALL TO CORNER 1 in [25 mm]
Expansion Joint Width

Surface	Aluminum
Gap width(s)	1 in [25 mm]
Height(s)	9/16 in [13.5 mm]
Metal type(s)	Aluminium 6063, T6
Seal Color(s)	Black
Waterproofing	Moisture barrier



Type	Nominal Joint Width A	Visible Width B	Installation Height C	Total Movement
NMM 25C	1 [25]	1 1/4 [31.5]	9/16 [13.5]	1 3/16 (+25/64-25/32) [30 (+10-20)]

SECTION DETAIL

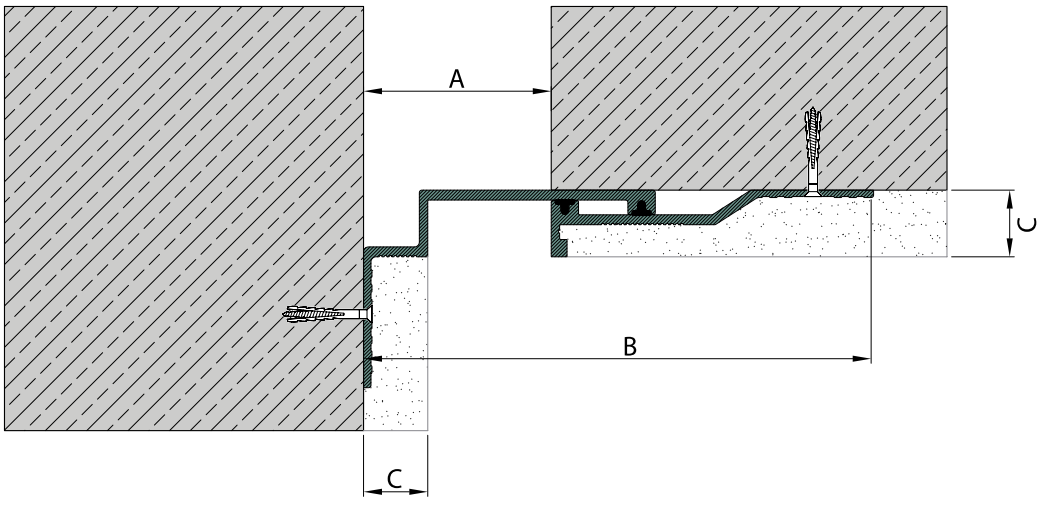

Drawing references correspond to the dimension schedule. Original geometry retained.

Source PDF page 49

NS

SEISMIC EXPANSION JOINT FLOOR TO FLOOR 1 - 3 in [25 - 75 mm] Expansion Gap

Surface	Aluminium Strips
Gap width(s)	1 - 3 in [25 - 75 mm]
Height(s)	1 1/16 in [27.5 mm]
Metal type(s)	Aluminium 6063, T6
Seal Color(s)	Free Seal
Waterproofing	Moisture barrier



SECTION DETAIL

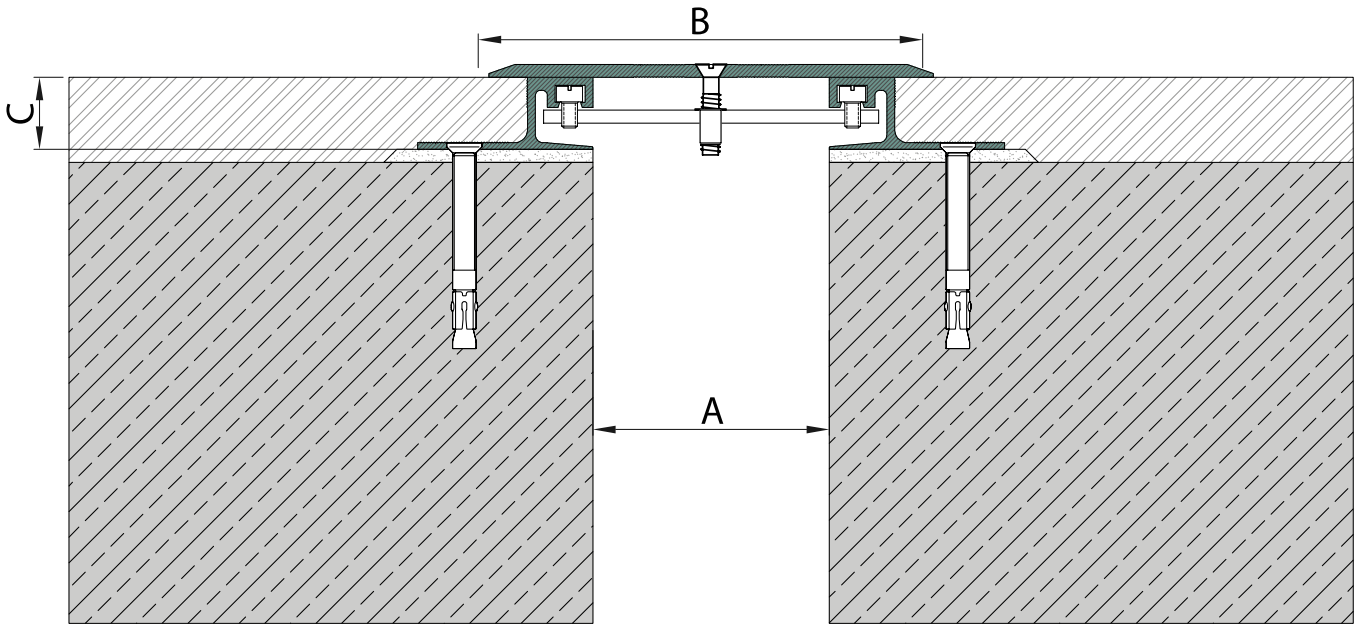

IMPERIAL DIMENSION SCHEDULE

Continued on page 38

NS

FRACTIONAL INCHES / ORIGINAL MILLIMETERS IN BRACKETS

Type	Nominal Joint Width A	Visible Width B	Installation Height C	Total Movement	Seismic Movement	Load Capacity
NS 25	1 [25]	4 5/16 [110]	1 1/16 [27.5]	1 3/16 (+19/32-19/32) [30 (+15-15)]	1 37/64 (+63/64-19/32) [40 (+25-15)]	Private Cars
NS 35	1 3/8 [35]	4 5/16 [110]	1 1/16 [27.5]	1 37/64 (+25/32-25/32) [40 (+20-20)]	2 9/16 (+1 37/64-63/64) [65 (+40-25)]	Private Cars
NS 50	2 [50]	5 7/8 [150]	1 1/16 [27.5]	2 3/4 (+1 3/8-1 3/8) [70 (+35-35)]	3 47/64 (+1 31/32-1 49/64) [95 (+50-45)]	Private Cars
NS 75	3 [75]	6 11/16 [170]	1 1/16 [27.5]	3 5/32 (+1 37/64-1 37/64) [80 (+40-40)]	4 17/32 (+1 31/32-2 9/16) [115 (+50-65)]	Private Cars

Dimensions and movement values are converted from the source schedule. Model identifiers, material grades and traffic categories are unchanged.

Source PDF page 50

NS-C

SEISMIC EXPANSION JOINT FLOOR TO WALL 1 - 3 in [25 - 75 mm] Expansion Gap

Surface	Solid Aluminium
Gap width(s)	1 - 3 in [25 - 75 mm]
Height(s)	1 1/16 in [27.5 mm]
Metal type(s)	Aluminium 6063, T6
Seal Color(s)	Free Seal
Waterproofing	Moisture barrier



SECTION DETAIL

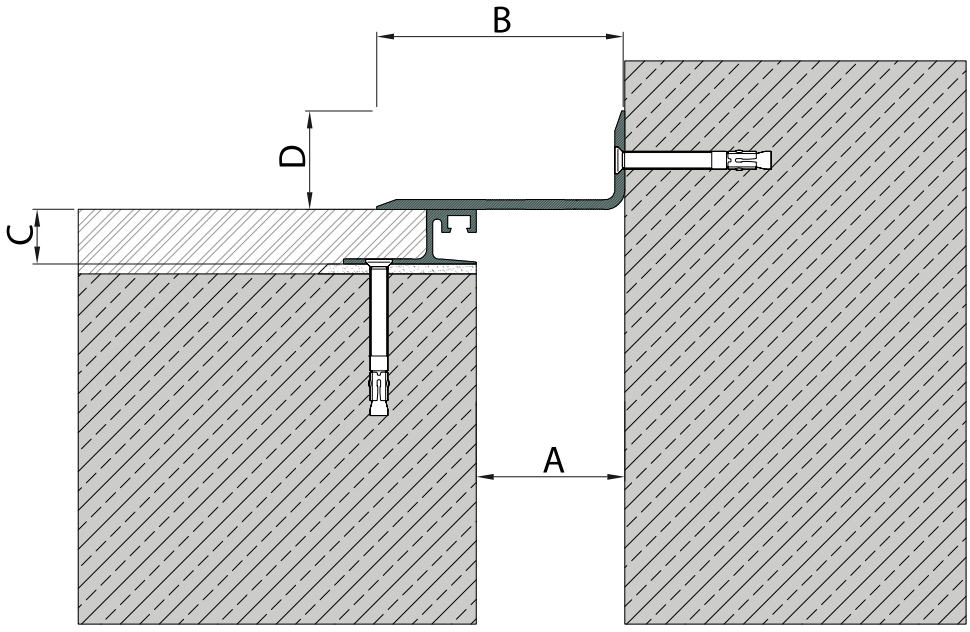

IMPERIAL DIMENSION SCHEDULE

Continued on page 40

NS-C

FRACTIONAL INCHES / ORIGINAL MILLIMETERS IN BRACKETS

Type	Nominal Joint Width A	Visible Width B	Installation Height C	Visible Height D	Total Movement	Seismic Movement	Load Capacity
NS 25C	1 [25]	2 5/8 [67]	1 1/16 [27.5]	1 9/16 [40]	1 3/16 (+19/32-19/32) [30 (+15-15)]	1 37/64 (+63/64-19/32) [40 (+25-15)]	Private Cars
NS 35C	1 3/8 [35]	2 5/8 [67]	1 1/16 [27.5]	1 9/16 [40]	1 37/64 (+25/32-25/32) [40 (+20-20)]	2 9/16 (+1 37/64-63/64) [65 (+40-25)]	Private Cars
NS 50C	2 [50]	3 15/16 [100]	1 1/16 [27.5]	1 9/16 [40]	2 3/4 (+1 3/8-1 3/8) [70 (+35-35)]	3 47/64 (+1 31/32-1 49/64) [95 (+50-45)]	Private Cars
NS 75C	3 [75]	4 3/4 [120]	1 1/16 [27.5]	1 15/16 [50]	3 5/32 (+1 37/64-1 37/64) [80 (+40-40)]	4 17/32 (+1 31/32-2 9/16) [115 (+50-65)]	Private Cars

Dimensions and movement values are converted from the source schedule. Model identifiers, material grades and traffic categories are unchanged.

Source PDF page 51

NSW

SEISMIC EXPANSION JOINT WALL TO WALL 1 - 3 in [25 - 75 mm] Expansion Gap

Surface	Solid Aluminium
Gap width(s)	1 - 3 in [25 - 75 mm]
Height(s)	5/8 in [16 mm]
Metal type(s)	Aluminium 6063, T6
Seal Color(s)	Free Seal



SECTION DETAIL

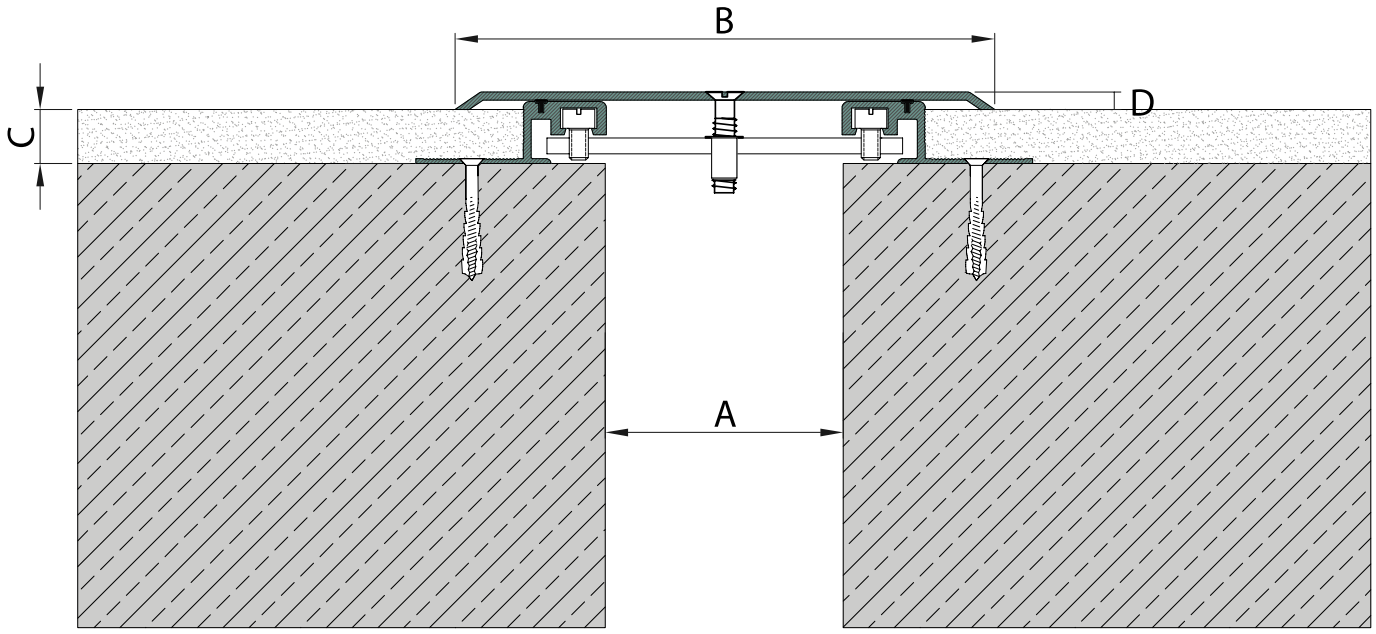

IMPERIAL DIMENSION SCHEDULE

Continued on page 42

NSW

FRACTIONAL INCHES / ORIGINAL MILLIMETERS IN BRACKETS

Type	Nominal Joint Width A	Visible Width B	Installation Height C	Visible Height D	Thermal Movement	Seismic Movement
NSW 25	1 [25]	4 5/16 [110]	5/8 [16]	1/4 [6.5]	1 3/16 (+19/32-19/32) [30 (+15-15)]	1 37/64 (+63/64-19/32) [40 (+25-15)]
NSW 35	1 3/8 [35]	4 3/4 [120]	5/8 [16]	1/4 [6.5]	1 37/64 (+25/32-25/32) [40 (+20-20)]	2 9/16 (+1 37/64-63/64) [65 (+40-25)]
NSW 50	2 [50]	5 7/8 [150]	5/8 [16]	1/4 [6.5]	2 3/4 (+1 3/8-1 3/8) [70 (+35-35)]	3 47/64 (+1 31/32-1 49/64) [95 (+50-45)]
NSW 75	3 [75]	6 11/16 [170]	5/8 [16]	1/4 [6.5]	3 5/32 (+1 37/64-1 37/64) [80 (+40-40)]	4 17/32 (+1 31/32-2 9/16) [115 (+50-65)]

Dimensions and movement values are converted from the source schedule. Model identifiers, material grades and traffic categories are unchanged.

Source PDF page 52

NSW-C

SEISMIC EXPANSION JOINT WALL TO CORNER 1 - 3 in [25 - 75 mm] Expansion Gap

Surface	Solid Aluminium
Gap width(s)	1 - 3 in [25 - 75 mm]
Height(s)	5/8 in [16 mm]
Metal type(s)	Aluminium 6063, T6
Seal Color(s)	Free Seal



SECTION DETAIL

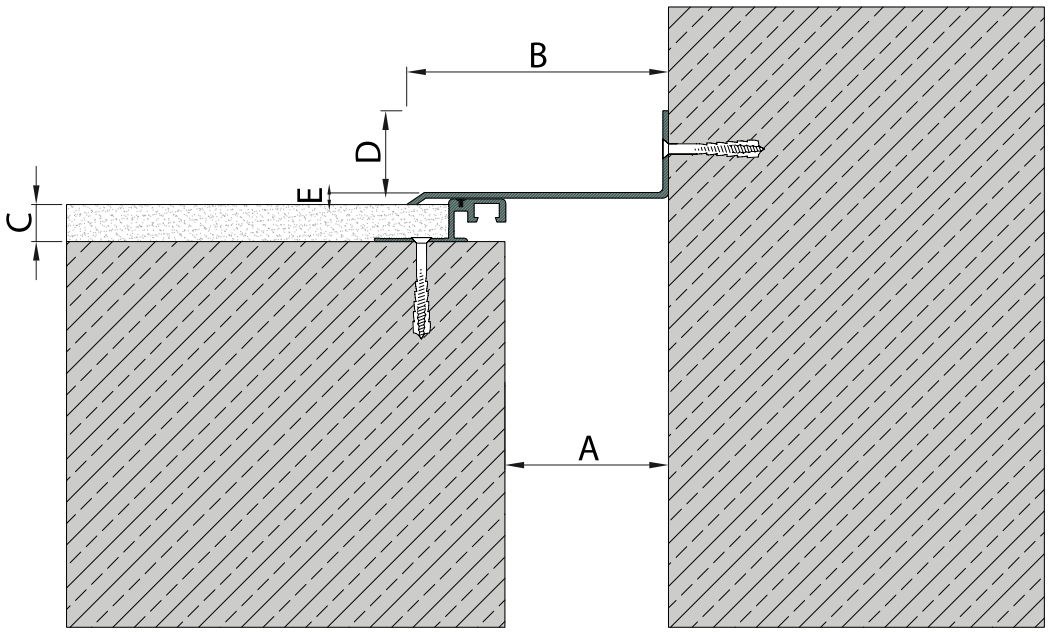

IMPERIAL DIMENSION SCHEDULE

Continued on page 44

NSW-C

FRACTIONAL INCHES / ORIGINAL MILLIMETERS IN BRACKETS

Type	Nominal Joint Width A	Visible Width B	Installation Height C	Total Height D	Visible Height E	Thermal Movement	Seismic Movement
NSW 25C	1 [25]	2 5/8 [67]	5/8 [16]	1 9/16 [40]	1/4 [6.5]	1 3/16 (+19/32-19/32) [30 (+15-15)]	1 31/32 (+63/64-63/64) [50 (+25-25)]
NSW 35C	1 3/8 [35]	3 1/16 [77]	5/8 [16]	1 9/16 [40]	1/4 [6.5]	1 37/64 (+25/32-25/32) [40 (+20-20)]	2 9/16 (+1 3/16-1 3/8) [65 (+30-35)]
NSW 50C	2 [50]	3 15/16 [100]	5/8 [16]	1 9/16 [40]	1/4 [6.5]	2 3/4 (+1 3/8-1 3/8) [70 (+35-35)]	3 47/64 (+1 31/32-1 49/64) [95 (+50-45)]
NSW 75C	3 [75]	4 3/4 [120]	5/8 [16]	1 9/16 [40]	1/4 [6.5]	3 5/32 (+1 37/64-1 37/64) [80 (+40-40)]	4 17/32 (+1 31/32-2 9/16) [115 (+50-65)]

Dimensions and movement values are converted from the source schedule. Model identifiers, material grades and traffic categories are unchanged.

Source PDF page 53

NZ

SEISMIC EXPANSION JOINT FLOOR TO FLOOR 1 3/8 - 3 in [35 - 75 mm] Expansion Gap

Surface	Solid Aluminium
Gap width(s)	1 3/8 - 3 in [35 - 75 mm]
Height(s)	1 in [25 mm]
Metal type(s)	Aluminium 6063, T6
Seal Color(s)	Free Seal
Waterproofing	Moisture barrier

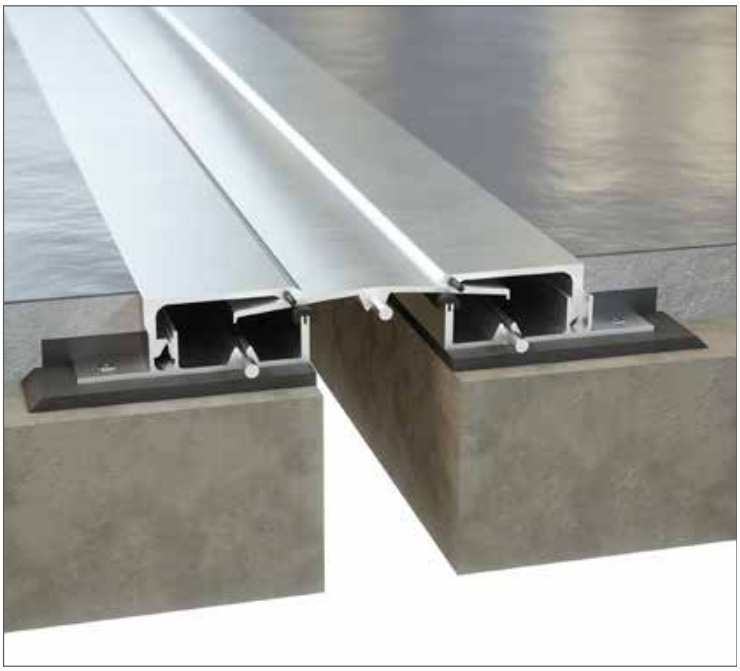

Type	Nominal Joint Width A	Visible Width B	Installation Height C	Total Movement	Load Capacity
NZ 35	1 3/8 [35]	5 7/8 [150]	1 [25]	2 3/4 (+1 37/64-1 3/16) [70 (+40-30)]	Private Cars
NZ 50	2 [50]	6 1/2 [165]	1 [25]	3 11/32 (+1 37/64-1 49/64) [85 (+40-45)]	Private Cars
NZ 75	3 [75]	7 1/2 [190]	1 [25]	3 11/32 (+1 37/64-1 49/64) [85 (+40-45)]	Private Cars

SECTION DETAIL

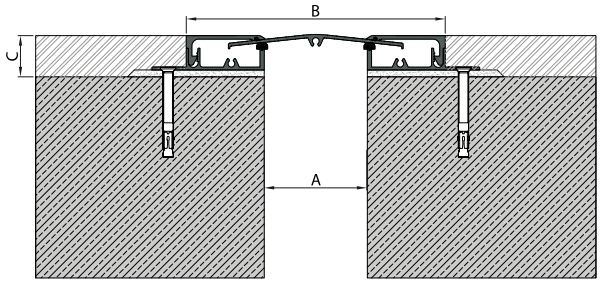

Drawing references correspond to the dimension schedule. Original geometry retained.

Source PDF page 54

NZ-C

SEISMIC EXPANSION JOINT FLOOR TO WALL 1 3/8 - 3 in [35 - 75 mm] Expansion Gap

Surface	Solid Aluminium
Gap width(s)	1 3/8 - 3 in [35 - 75 mm]
Height(s)	1 in [25 mm]
Metal type(s)	Aluminium 6063, T6
Seal Color(s)	Free Seal
Waterproofing	Moisture barrier



Type	Nominal Joint Width A	Visible Width B	Installation Height C	Total Movement	Load Capacity
NZ 35C	1 3/8 [35]	3 5/8 [92]	1 [25]	1 37/64 (+25/32-25/32) [40 (+20-20)]	Private Cars
NZ 50C	2 [50]	4 3/16 [107]	1 [25]	1 37/64 (+25/32-25/32) [40 (+20-20)]	Private Cars
NZ 75C	3 [75]	5 3/16 [132]	1 [25]	1 37/64 (+25/32-25/32) [40 (+20-20)]	Private Cars

SECTION DETAIL

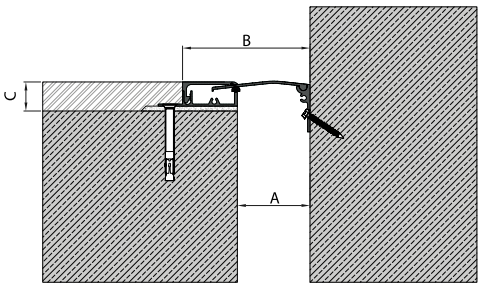

Drawing references correspond to the dimension schedule. Original geometry retained.

Source PDF page 55

UCP

EXPANSION JOINT FLOOR TO FLOOR 1 - 8 in [25 - 200 mm] Expansion Gap

Surface	Solid Aluminium Brushed Finish
Gap width(s)	1 - 8 in [25 - 200 mm]
Height(s)	3/32 - 5/16 in [2.5 - 8 mm]
Metal type(s)	Aluminium 6063, T6
Seal Color(s)	Free Seal
Waterproofing	Moisture barrier



SECTION DETAIL

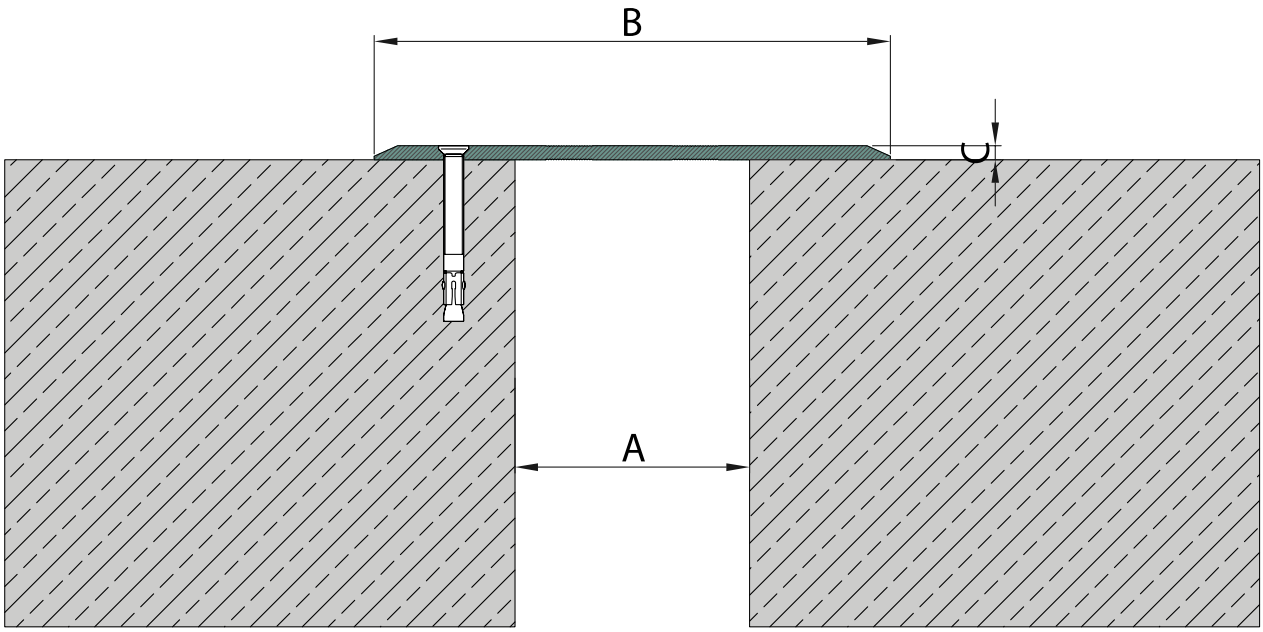

IMPERIAL DIMENSION SCHEDULE

Continued on page 48

UCP

FRACTIONAL INCHES / ORIGINAL MILLIMETERS IN BRACKETS

Type	Nominal Joint Width A	Visible Width B	Installation Height C	Total Movement	Load Capacity
UCP 25	1-1 3/8 [25-35]	4 5/16 [110]	3/32 [2.5]	2 9/16 (+1 37/64-63/64) [65 (+40-25)]	Vehicle
UCP 50	2 [50]	5 7/8 [150]	5/32 [4]	3 15/16 (+1 31/32-1 31/32) [100 (+50-50)]	Vehicle
UCP 100	4 [100]	8 11/16 [220]	1/4 [6]	5 29/32 (+1 31/32-3 15/16) [150 (+50-100)]	Vehicle
UCP 150	6 [150]	10 5/8 [270]	5/16 [8]	7 7/8 (+1 31/32-5 29/32) [200 (+50-150)]	Vehicle
UCP 200	8 [200]	12 5/8 [320]	5/16 [8]	9 27/32 (+1 31/32-7 7/8) [250 (+50-200)]	Vehicle

Dimensions and movement values are converted from the source schedule. Model identifiers, material grades and traffic categories are unchanged.

Source PDF page 56

UCP-C

EXPANSION JOINT FLOOR TO WALL 1-8 in [25-200 mm] Expansion Joint Width

Surface	Solid Aluminium Brushed Finish
Gap width(s)	1 - 8 in [25 - 200 mm]
Height(s)	40-68
Metal type(s)	Aluminium 6063, T6
Seal Color(s)	Free Seal
Waterproofing	Moisture barrier



SECTION DETAIL

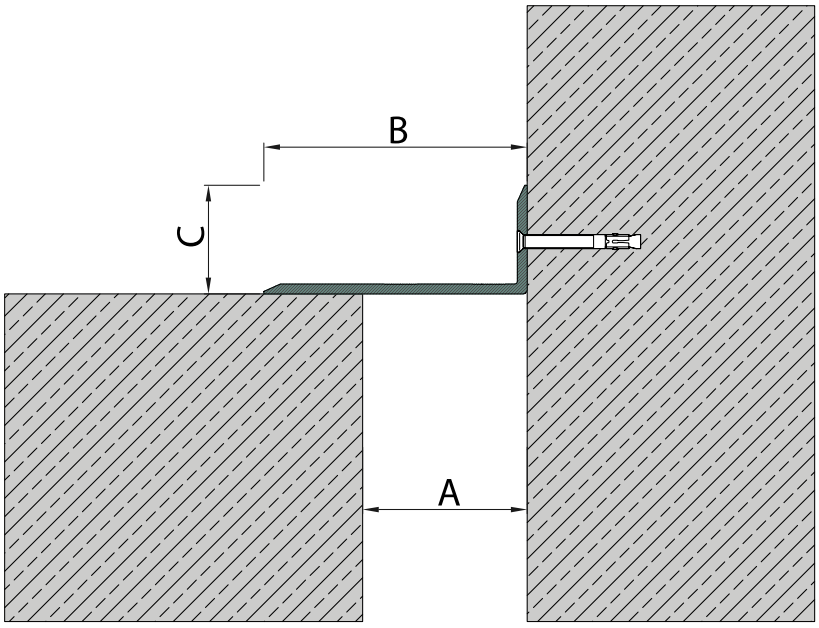

IMPERIAL DIMENSION SCHEDULE

Continued on page 50

UCP-C

FRACTIONAL INCHES / ORIGINAL MILLIMETERS IN BRACKETS

Type	Nominal Joint Width A	Visible Width B	Installation Height C	Total Movement	Load Capacity
UCP 25C	1-1 3/8 [25-35]	2 5/8 [67]	1 9/16 [40]	2 9/16 (+1 37/64-63/64) [65 (+40-25)]	Vehicle
UCP 50C	2 [50]	3 15/16 [100]	1 9/16 [40]	3 15/16 (+1 31/32-1 31/32) [100 (+50-50)]	Vehicle
UCP 100C	4 [100]	6 5/16 [160]	2 3/8 [61]	5 29/32 (+1 31/32-3 15/16) [150 (+50-100)]	Vehicle
UCP 150C	6 [150]	8 1/4 [210]	2 3/8 [61]	7 7/8 (+1 31/32-5 29/32) [200 (+50-150)]	Vehicle
UCP 200C	8 [200]	9 13/16 [250]	2 11/16 [68]	9 27/32 (+1 31/32-7 7/8) [250 (+50-200)]	Vehicle

Dimensions and movement values are converted from the source schedule. Model identifiers, material grades and traffic categories are unchanged.

Source PDF page 57

UCPR

EXPANSION JOINT FLOOR TO FLOOR 2 - 8 in [50 - 200 mm] Expansion Gap

Surface	Textured Rubber
Gap width(s)	2 - 8 in [50 - 200 mm]
Height(s)	9/16 in [15 mm]
Metal type(s)	Steel
Seal Color(s)	Black

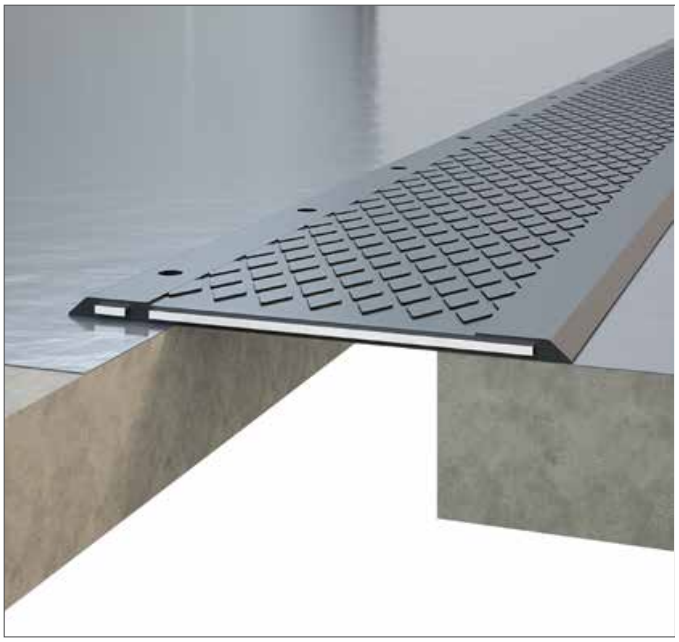

SECTION DETAIL

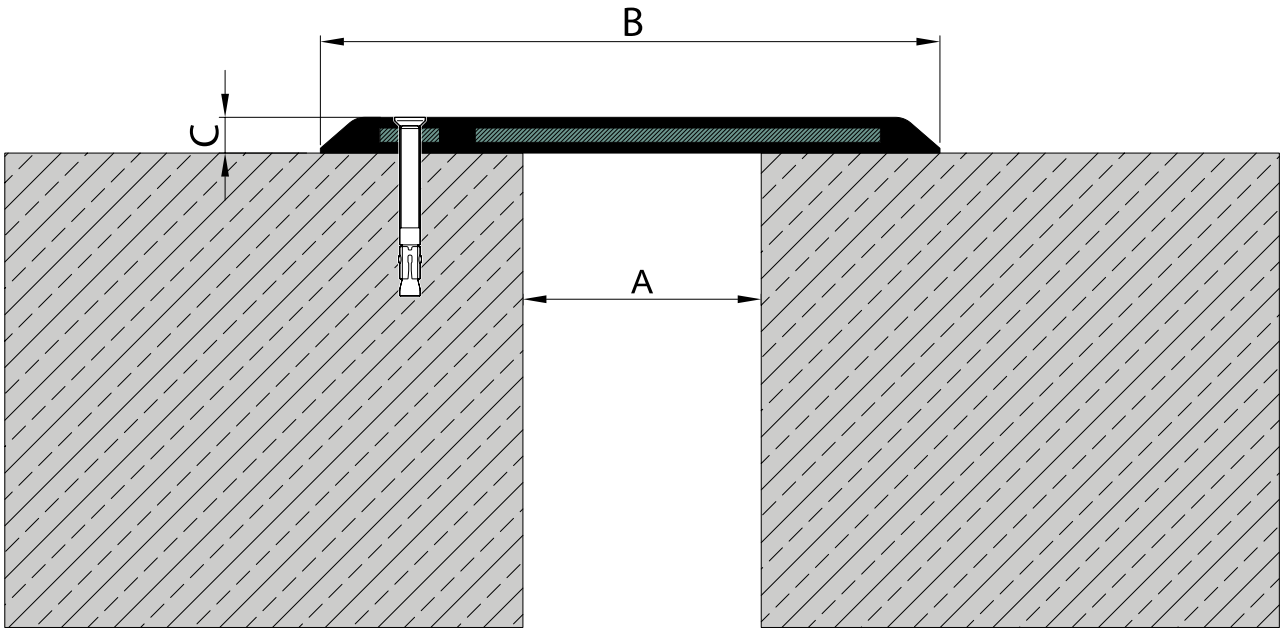

IMPERIAL DIMENSION SCHEDULE

Continued on page 52

UCPR

FRACTIONAL INCHES / ORIGINAL MILLIMETERS IN BRACKETS

Type	Nominal Joint Width A	Visible Width B	Installation Height C	Total Movement	Load Capacity
UCPR 50	2 [50]	8 1/4 [210]	9/16 [15]	3 15/16 (+1 31/32-1 31/32) [100 (+50-50)]	Vehicle
UCPR 75	3 [75]	8 7/8 [225]	9/16 [15]	4 59/64 (+1 31/32-2 61/64) [125 (+50-75)]	Vehicle
UCPR 100	4 [100]	10 1/4 [260]	9/16 [15]	5 29/32 (+1 31/32-3 15/16) [150 (+50-100)]	Vehicle
UCPR 150	6 [150]	12 13/16 [325]	9/16 [15]	7 7/8 (+1 31/32-5 29/32) [200 (+50-150)]	Vehicle
UCPR 200	8 [200]	14 3/4 [375]	9/16 [15]	9 27/32 (+1 31/32-7 7/8) [250 (+50-200)]	Vehicle

Dimensions and movement values are converted from the source schedule. Model identifiers, material grades and traffic categories are unchanged.

Source PDF page 58

UCC

EXPANSION JOINT FLOOR TO FLOOR, WALL TO WALL
13/16 - 2 9/16 in [20 - 65 mm] Expansion Joint Width

Surface	Solid Aluminium Brushed Finish Anodized Finish
Joint width(s)	13/16-2 9/16 in [20-65 mm]
Height(s)	13/64 in [5 mm]
Metal type(s)	Aluminium 6063, T6
Seal Color(s)	Free Seal



Type	Nominal Joint Width A	Visible Width B	Installation Height C	Total Movement	Load Capacity
UCC 50	13/16-1 3/16 [20-30]	1 15/16 [50]	13/64 [5]	2 9/16 (±1 37/64-63/64) [65 (±40-25)]	Pedestrian
UCC 70	1 3/16-2 [30-50]	2 3/4 [70]	13/64 [5]	3 15/16 (±1 31/32-1 31/32) [100 (±50-50)]	Pedestrian
UCC 90	1 3/4-2 9/16 [45-65]	3 9/16 [90]	13/64 [5]	5 29/32 (±1 31/32-3 15/16) [150 (±50-100)]	Pedestrian

SECTION DETAIL

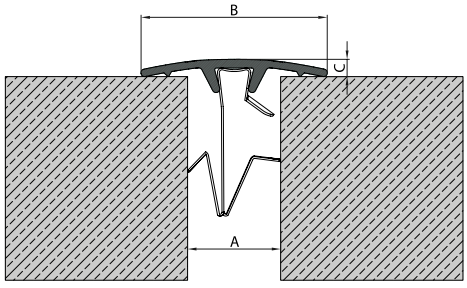

Drawing references correspond to the dimension schedule. Original geometry retained.

Source PDF page 59

UCC-C

EXPANSION JOINT FLOOR TO WALL, WALL TO CORNER 13/16 - 2 9/16 in [20 - 65 mm] Expansion Joint Width

Surface	Solid Aluminium Anodized Finish
Joint width(s)	13/16-2 9/16 in [20-65 mm]
Height(s)	13/16 in [20 mm]
Metal type(s)	Aluminium 6063, T6
Seal Color(s)	Free Seal



Type	Nominal Joint Width A	Visible Width B	Visible Height C	Total Movement	Load Capacity
UCC 50C	13/16-1 3/16 [20-30]	1 15/16 [50]	13/16 [21]	25/32 (±25/64) [20 (±10)]	Pedestrian
UCC 70C	1 3/16-2 [30-50]	2 3/4 [70]	13/16 [21]	1 3/16 (±19/32) [30 (±15)]	Pedestrian
UCC 90C	1 3/4-2 9/16 [45-65]	3 9/16 [90]	13/16 [21]	1 49/64 (±57/64) [45 (±22.5)]	Pedestrian

SECTION DETAIL

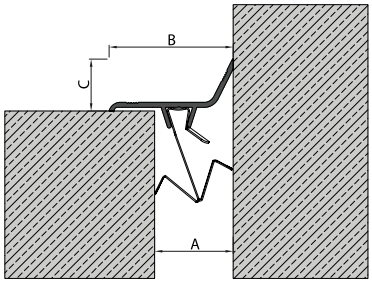

Drawing references correspond to the dimension schedule. Original geometry retained.

Source PDF page 60

UWC

EXPANSION JOINT WALL TO WALL 1 - 6 in [25 - 150 mm] Expansion Gap

Surface	Solid Aluminium Brushed Finish
Gap width(s)	2 - 6 in [50 - 150 mm]
Height(s)	3/8 in [10 mm]
Metal type(s)	Aluminium 6063, T6
Waterproofing	Moisture barrier



Type	Nominal Joint Width A	Visible Width B	Installation Height C	Total Movement
UWC 50	2 [50]	5 7/8 [150]	5/16 [8]	3 35/64 (+1 37/64-1 31/32) [90(+40-50)]
UWC 100	4 [100]	7 7/8 [200]	5/16 [8]	5 33/64 (+1 37/64-3 15/16) [140(+40-100)]
UWC 150	6 [150]	11 7/16 [290]	5/16 [8]	9 1/16 (+3 5/32-5 29/32) [230(+80-150)]

SECTION DETAIL

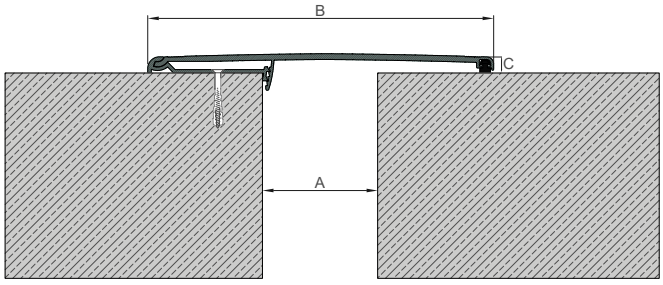

Drawing references correspond to the dimension schedule. Original geometry retained.

Source PDF page 61

UWC-C

EXPANSION JOINT WALL TO CORNER 2 - 6 in [50 - 150 mm] Expansion Gap

Surface	Solid Aluminium Brushed Finish
Gap width(s)	2 - 6 in [50 - 150 mm]
Height(s)	3/8 in [10 mm]
Metal type(s)	Aluminium 6063, T6
Waterproofing	Moisture barrier



Type	Nominal Joint Width A	Visible Width B	Visible Height C	Total Movement
UWC 50C	2 [50]	3 15/16 [100]	2 1/2 [64]	3 35/64 (+1 37/64-1 31/32) [90(+40-50)]
UWC 100C	4 [100]	5 7/8 [150]	2 1/2 [64]	5 33/64 (+1 37/64-3 15/16) [140(+40-100)]
UWC 150C	6 [150]	9 7/16 [240]	2 1/2 [64]	9 1/16 (+3 5/32-5 29/32) [230(+80-150)]

SECTION DETAIL

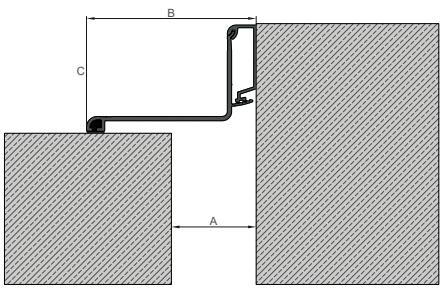

Drawing references correspond to the dimension schedule. Original geometry retained.

Source PDF page 62

UFSJ

SEISMIC EXPANSION JOINT FLOOR TO FLOOR 4 - 16 in [100 - 400 mm] Expansion Joint Width

Surface	Aluminium Strips Rubber Seal Floor Finish
Joint width(s)	4 - 16 in [100 - 400 mm]
Height(s)	2 in [51 mm]
Metal type(s)	Aluminium 6063, T6
Seal Color(s)	Black, Grey, Beige, White and Brown
Waterproofing	Moisture barrier



SECTION DETAIL

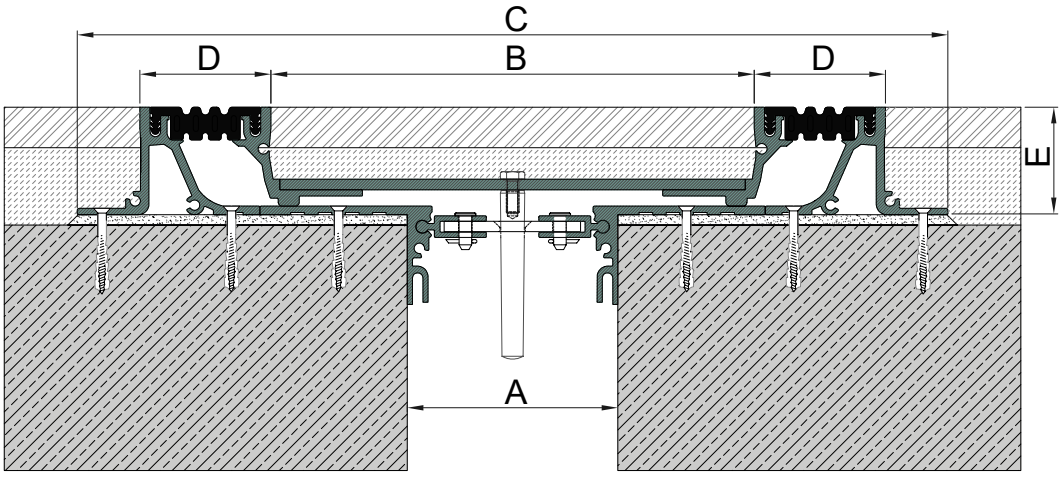

IMPERIAL DIMENSION SCHEDULE

Continued on page 58

Source PDF page 63

UFSJ

FRACTIONAL INCHES / ORIGINAL MILLIMETERS IN BRACKETS

Type	Nominal Joint Width A	Pan Width B	Total Width C	Visible Width D	Installation Height E	Total Movement	Seismic Movement	Load Capacity
UFSJ 100	4 [100]	9 1/16 [230]	16 5/16 [414]	2 7/16 [62.3]	2 [51]	1 31/32 (±63/64) [50 (±25)]	7 31/64 (+5 33/64-1 31/32) [190 (+140-50)]	Pedestrian
UFSJ 150	6 [150]	11 [280]	18 1/4 [464]	2 7/16 [62.3]	2 [51]	1 31/32 (±63/64) [50 (±25)]	9 29/64 (+5 33/64-3 15/16) [240 (+140-100)]	Pedestrian
UFSJ 200	8 [200]	13 [330]	20 1/4 [514]	2 7/16 [62.3]	2 [51]	1 31/32 (±63/64) [50 (±25)]	11 27/64 (+5 33/64-5 29/32) [290 (+140-150)]	Pedestrian
UFSJ 250	10 [250]	14 15/16 [380]	22 3/16 [564]	2 7/16 [62.3]	2 [51]	1 31/32 (±63/64) [50 (±25)]	13 25/64 (+5 33/64-7 7/8) [340 (+140-200)]	Pedestrian
UFSJ 300	12 [300]	16 15/16 [430]	24 3/16 [614]	2 7/16 [62.3]	2 [51]	1 31/32 (±63/64) [50 (±25)]	15 23/64 (+5 33/64-9 27/32) [390 (+140-250)]	Pedestrian
UFSJ 400	16 [400]	20 7/8 [530]	28 1/8 [714]	2 7/16 [62.3]	2 [51]	1 31/32 (±63/64) [50 (±25)]	19 19/64 (+5 33/64-13 25/32) [490 (+140-350)]	Pedestrian

Dimensions and movement values are converted from the source schedule. Model identifiers, material grades and traffic categories are unchanged.

Source PDF page 63

UFSJ-C

SEISMIC EXPANSION JOINT FLOOR TO WALL 4 - 16 in [100 - 400 mm] Expansion Joint Width

Surface	Aluminium Strips Rubber Seal Floor Finish
Joint width(s)	4 - 16 in [100 - 400 mm]
Height(s)	2 in [51 mm]
Metal type(s)	Aluminium 6063, T6
Seal Color(s)	Black, Grey, Beige, White and Brown
Waterproofing	Moisture barrier



SECTION DETAIL

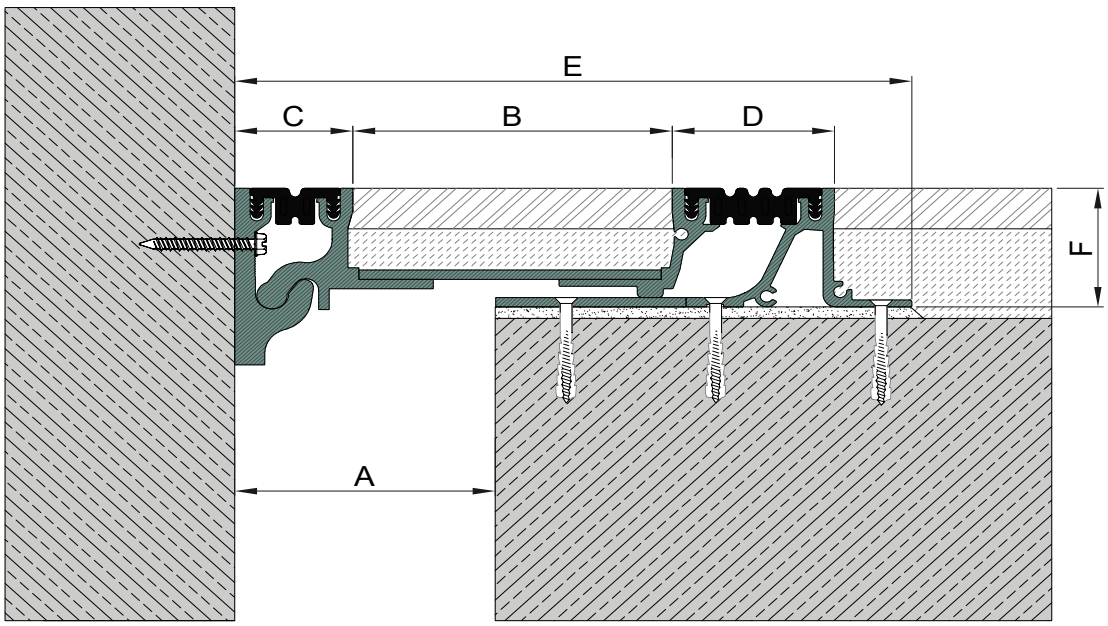

IMPERIAL DIMENSION SCHEDULE

Continued on page 60

Source PDF page 64

UFSJ-C

FRACTIONAL INCHES / ORIGINAL MILLIMETERS IN BRACKETS

Type	Nominal Joint Width A	Pan Width B	Visible Width C	Visible Width D	Total Width E	Installation Height F	Thermal Movement	Seismic Movement	Load Capacity
UFSJ 100C	4 [100]	4 13/16 [123]	1 13/16 [45.4]	2 7/16 [62.3]	10 1/4 [260.7]	2 [51]	1 37/64 (±25/32) [40 (±20)]	4 59/64 (+2 23/64-2 9/16) [125 (+60-65)]	Pedestrian
UFSJ 150C	6 [150]	6 13/16 [173]	1 13/16 [45.4]	2 7/16 [62.3]	12 1/4 [310.7]	2 [51]	1 37/64 (±25/32) [40 (±20)]	6 57/64 (+2 23/64-4 17/32) [175 (+60-115)]	Pedestrian
UFSJ 200C	8 [200]	8 3/4 [223]	1 13/16 [45.4]	2 7/16 [62.3]	14 3/16 [360.7]	2 [51]	1 37/64 (±25/32) [40 (±20)]	8 55/64 (+2 23/64-6 1/2) [225 (+60-165)]	Pedestrian
UFSJ 250C	10 [250]	10 3/4 [273]	1 13/16 [45.4]	2 7/16 [62.3]	16 3/16 [410.7]	2 [51]	1 37/64 (±25/32) [40 (±20)]	10 53/64 (+2 23/64-8 15/32) [275 (+60-215)]	Pedestrian
UFSJ 300C	12 [300]	12 11/16 [323]	1 13/16 [45.4]	2 7/16 [62.3]	18 1/8 [460.7]	2 [51]	1 37/64 (±25/32) [40 (±20)]	12 51/64 (+2 23/64-10 7/16) [325 (+60-265)]	Pedestrian
UFSJ 400C	16 [400]	16 5/8 [423]	1 13/16 [45.4]	2 7/16 [62.3]	22 1/16 [560.7]	2 [51]	1 37/64 (±25/32) [40 (±20)]	16 47/64 (+2 23/64-14 3/8) [425 (+60-365)]	Pedestrian

Dimensions and movement values are converted from the source schedule. Model identifiers, material grades and traffic categories are unchanged.

Source PDF page 64

UFSJ-X

SEISMIC EXPANSION JOINT FLOOR TO FLOOR 4-16 in [100-400 mm] Expansion Gap

Surface	Aluminium Strips Rubber Seal Floor Finish
Gap width(s)	4 - 16 in [100 - 400 mm]
Height(s)	6 5/16 in [160 mm]
Metal type(s)	Aluminium 6063, T6
Seal Color(s)	Black, Grey, Beige, White and Brown
Waterproofing	Moisture barrier



SECTION DETAIL

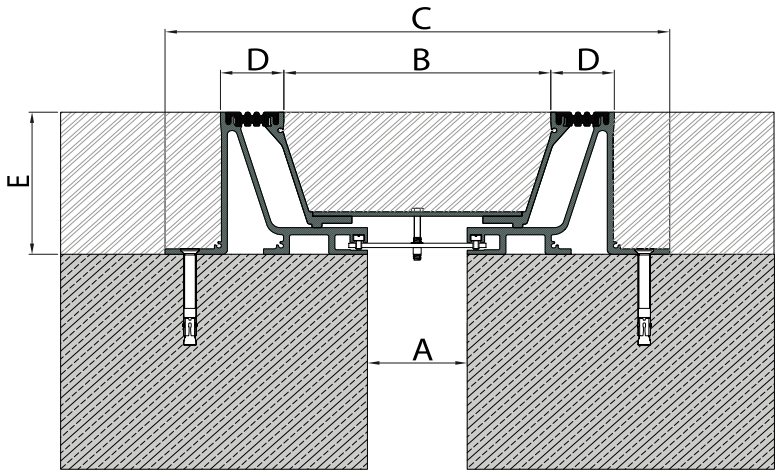

IMPERIAL DIMENSION SCHEDULE

Continued on page 62

UFSJ-X

FRACTIONAL INCHES / ORIGINAL MILLIMETERS IN BRACKETS

Type	Nominal Joint Width A	Pan Width B	Total Width C	Visible Width D	Installation Height E	Thermal Movement	Seismic Movement	Load Capacity
UFSJ 100X	4 [100]	10 1/2 [267]	19 7/8 [505]	2 1/2 [64]	6 5/16 [160]	1 31/32 (±63/64) [50 (±25)]	6 57/64 (+3 15/16-2 61/64) [175 (+100-75)]	Up to 2500 unit not stated
UFSJ 150X	6 [150]	12 1/2 [317]	21 7/8 [555]	2 1/2 [64]	6 5/16 [160]	1 31/32 (±63/64) [50 (±25)]	7 7/8 (+3 15/16-3 15/16) [200 (+100-100)]	Up to 2500 unit not stated
UFSJ 200X	8 [200]	14 7/16 [367]	23 13/16 [605]	2 1/2 [64]	6 5/16 [160]	1 31/32 (±63/64) [50 (±25)]	9 27/32 (+3 15/16-5 29/32) [250 (+100-150)]	Up to 2500 unit not stated
UFSJ 250X	10 [250]	16 7/16 [417]	25 13/16 [655]	2 1/2 [64]	6 5/16 [160]	1 31/32 (±63/64) [50 (±25)]	11 13/16 (+3 15/16-7 7/8) [300 (+100-200)]	Up to 2500 unit not stated
UFSJ 300X	12 [300]	18 3/8 [467]	27 3/4 [705]	2 1/2 [64]	6 5/16 [160]	1 31/32 (±63/64) [50 (±25)]	13 25/32 (+3 15/16-9 27/32) [350 (+100-250)]	Up to 2500 unit not stated
UFSJ 400X	16 [400]	22 5/16 [567]	31 11/16 [805]	2 1/2 [64]	6 5/16 [160]	1 31/32 (±63/64) [50 (±25)]	17 23/32 (+3 15/16-13 25/32) [450 (+100-350)]	Up to 2500 unit not stated

Dimensions and movement values are converted from the source schedule. Model identifiers, material grades and traffic categories are unchanged.

The source states “UPTO 2500” without a unit in this schedule. Confirm the load definition and unit before specifying.

Source PDF page 65

UFSJ-XC

SEISMIC EXPANSION JOINT FLOOR TO WALL 4-16 in [100-400 mm] Expansion Gap

Surface	Aluminium Strips Rubber Seal Floor Finish
Gap width(s)	4 - 16 in [100 - 400 mm]
Height(s)	6 5/16 in [160 mm]
Metal type(s)	Aluminium 6063, T6
Seal Color(s)	Black, Grey, Beige, White and Brown
Waterproofing	Moisture barrier



SECTION DETAIL

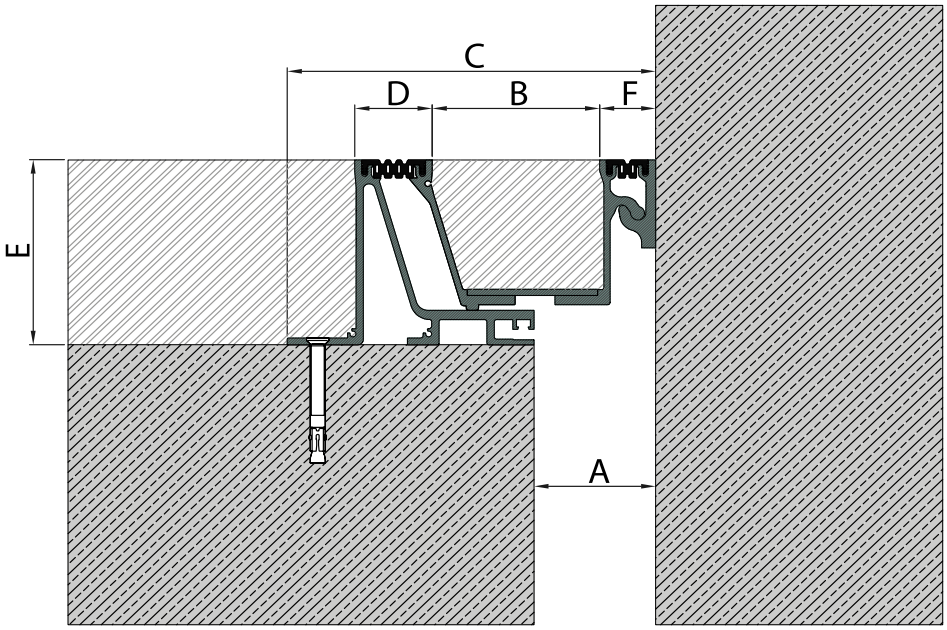

IMPERIAL DIMENSION SCHEDULE

Continued on page 64

Source PDF page 66

UFSJ-XC

FRACTIONAL INCHES / ORIGINAL MILLIMETERS IN BRACKETS

Type	Nominal Joint Width A	Pan Width B	Total Width C	Visible Width D	Installation Height E	Visible Width F	Thermal Movement	Seismic Movement	Load Capacity
UFSJ 100XC	4 [100]	5 7/16 [138]	11 15/16 [303]	2 1/2 [64]	6 5/16 [160]	1 13/16 [46]	1 37/64 (±25/32) [40 (±20)]	4 17/32 (+1 31/32-2 9/16) [115 (+50-65)]	Up to 2500 unit not stated
UFSJ 150XC	6 [150]	7 3/8 [188]	13 7/8 [353]	2 1/2 [64]	6 5/16 [160]	1 13/16 [46]	1 37/64 (±25/32) [40 (±20)]	6 1/2 (+1 31/32-4 17/32) [165 (+50-115)]	Up to 2500 unit not stated
UFSJ 200XC	8 [200]	9 3/8 [238]	15 7/8 [403]	2 1/2 [64]	6 5/16 [160]	1 13/16 [46]	1 37/64 (±25/32) [40 (±20)]	8 15/32 (+1 31/32-6 1/2) [215 (+50-165)]	Up to 2500 unit not stated
UFSJ 250XC	10 [250]	11 5/16 [288]	17 13/16 [453]	2 1/2 [64]	6 5/16 [160]	1 13/16 [46]	1 37/64 (±25/32) [40 (±20)]	10 7/16 (+1 31/32-8 15/32) [265 (+50-215)]	Up to 2500 unit not stated
UFSJ 300XC	12 [300]	13 5/16 [338]	19 13/16 [503]	2 1/2 [64]	6 5/16 [160]	1 13/16 [46]	1 37/64 (±25/32) [40 (±20)]	12 13/32 (+1 31/32-10 7/16) [315 (+50-265)]	Up to 2500 unit not stated
UFSJ 400XC	16 [400]	17 1/4 [438]	23 3/4 [603]	2 1/2 [64]	6 5/16 [160]	1 13/16 [46]	1 37/64 (±25/32) [40 (±20)]	16 11/32 (+1 31/32-14 3/8) [415 (+50-365)]	Up to 2500 unit not stated

Dimensions and movement values are converted from the source schedule. Model identifiers, material grades and traffic categories are unchanged.

The source states “UPTO 2500” without a unit in this schedule. Confirm the load definition and unit before specifying.

Source PDF page 66

NFSJ

SEISMIC EXPANSION JOINT FLOOR TO FLOOR 1 - 3 in [25 - 75 mm] Expansion Gap

Surface	Aluminium Strips Sealant
Gap width(s)	1 - 3 in [25 - 75 mm]
Height(s)	2 11/16 in [68 mm]
Metal type(s)	Aluminium 6063, T6
Seal Color(s)	Sealant Colors
Waterproofing	Moisture barrier



SECTION DETAIL

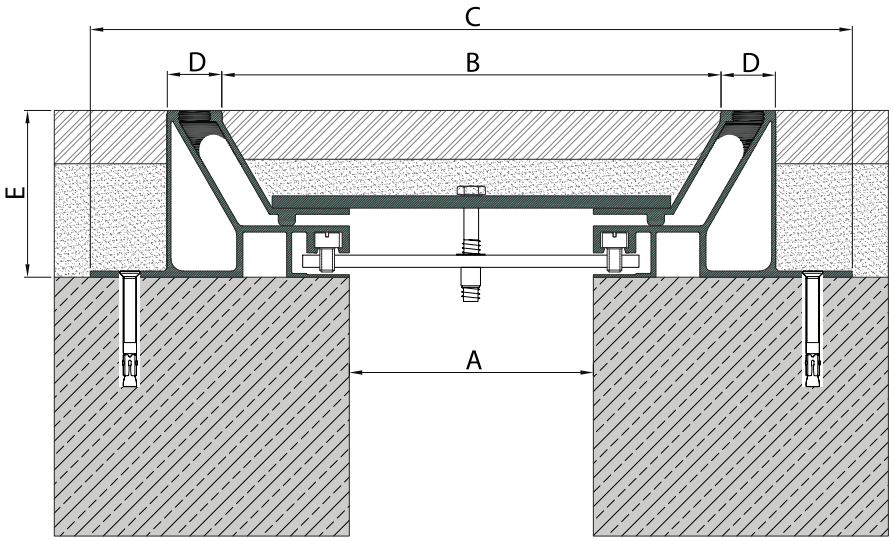

IMPERIAL DIMENSION SCHEDULE

Continued on page 66

Source PDF page 67

NFSJ

FRACTIONAL INCHES / ORIGINAL MILLIMETERS IN BRACKETS

Type	Nominal Joint Width A	Pan Width B	Total Width C	Visible Width D	Installation Height E	Total Movement	Seismic Movement	Load Capacity
NFSJ 25	1 [25]	5 1/8 [130]	9 3/8 [238]	7/8 [22]	2 11/16 [68]	1 3/8 (+25/32-19/32) [35 (+20-15)]	2 3/4 (+1 31/32-25/32) [70 (+50-20)]	Pedestrian
NFSJ 35	1 3/8 [35]	5 1/2 [140]	9 3/4 [248]	7/8 [22]	2 11/16 [68]	1 37/64 (+25/32-25/32) [40 (+20-20)]	3 5/32 (+1 31/32-1 3/16) [80 (+50-30)]	Pedestrian
NFSJ 50	2 [50]	6 1/8 [155]	10 3/8 [263]	7/8 [22]	2 11/16 [68]	1 37/64 (+25/32-25/32) [40 (+20-20)]	3 35/64 (+1 31/32-1 37/64) [90 (+50-40)]	Pedestrian
NFSJ 75	3 [75]	7 1/16 [180]	11 5/16 [287]	7/8 [22]	2 11/16 [68]	1 37/64 (+25/32-25/32) [40 (+20-20)]	4 23/32 (+1 31/32-2 3/4) [120 (+50-70)]	Pedestrian

Dimensions and movement values are converted from the source schedule. Model identifiers, material grades and traffic categories are unchanged.

Source PDF page 67

NFSJ-C

SEISMIC EXPANSION JOINT FLOOR TO WALL 1 - 3 in [25 - 75 mm] Expansion Gap

Surface	Aluminium Strips Sealant
Gap width(s)	1 - 3 in [25 - 75 mm]
Height(s)	2 11/16 in [68 mm]
Metal type(s)	Aluminium 6063, T6
Seal Color(s)	Sealant Colors
Waterproofing	Moisture barrier



SECTION DETAIL

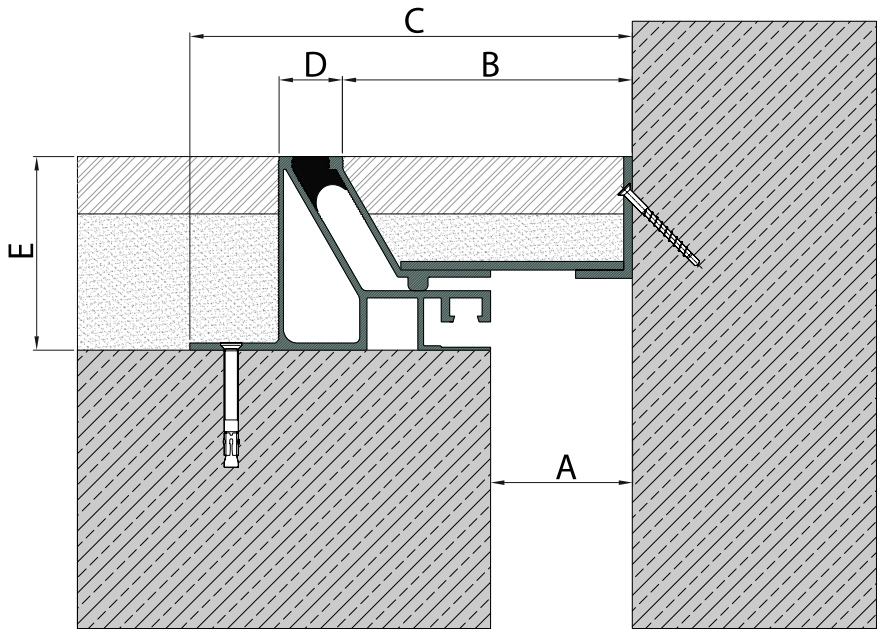

IMPERIAL DIMENSION SCHEDULE

Continued on page 68

NFSJ-C

FRACTIONAL INCHES / ORIGINAL MILLIMETERS IN BRACKETS

Type	Nominal Joint Width A	Pan Width B	Total Width C	Visible Width D	Installation Height E	Thermal Movement	Seismic Movement	Load Capacity
NFSJ 25C	1 [25]	3 1/16 [77]	5 3/16 [132]	7/8 [22]	2 11/16 [68]	25/32 (+25/64-25/64) [20 (+10-10)]	1 49/64 (+63/64-25/32) [45 (+25-20)]	Pedestrian
NFSJ 35C	1 3/8 [35]	3 7/16 [87]	5 9/16 [142]	7/8 [22]	2 11/16 [68]	25/32 (+25/64-25/64) [20 (+10-10)]	2 11/64 (+63/64-1 3/16) [55 (+25-30)]	Pedestrian
NFSJ 50C	2 [50]	4 [102]	6 3/16 [157]	7/8 [22]	2 11/16 [68]	25/32 (+25/64-25/64) [20 (+10-10)]	2 3/4 (+63/64-1 49/64) [70 (+25-45)]	Pedestrian
NFSJ 75C	3 [75]	5 1/16 [128]	7 3/16 [182]	7/8 [22]	2 11/16 [68]	25/32 (+25/64-25/64) [20 (+10-10)]	3 47/64 (+63/64-2 3/4) [95 (+25-70)]	Pedestrian

Dimensions and movement values are converted from the source schedule. Model identifiers, material grades and traffic categories are unchanged.

Source PDF page 68

NFSJ

SEISMIC EXPANSION JOINT FLOOR TO FLOOR 4 - 16 in [100 - 400 mm] Expansion Gap

Surface	Aluminium Strips Sealant
Gap width(s)	4 - 16 in [100 - 400 mm]
Height(s)	2 11/16 in [68 mm]
Metal type(s)	Aluminium 6063, T6
Seal Color(s)	Sealant Colors
Waterproofing	Moisture barrier



SECTION DETAIL

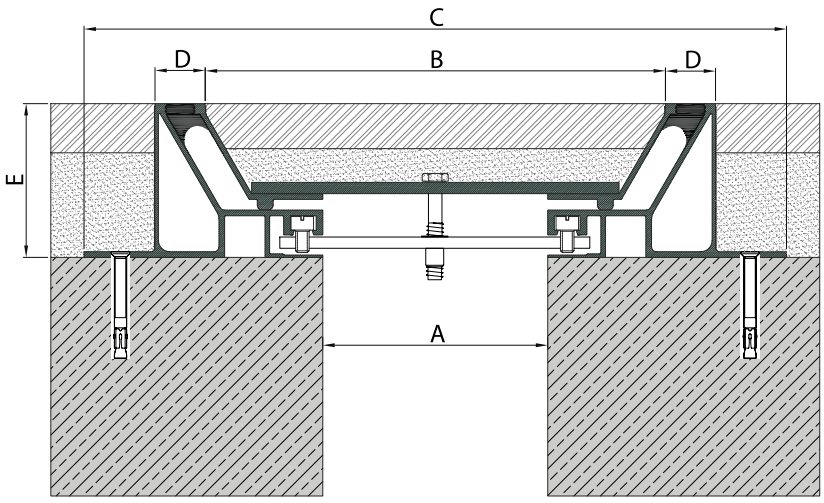

IMPERIAL DIMENSION SCHEDULE

Continued on page 70

NFSJ

FRACTIONAL INCHES / ORIGINAL MILLIMETERS IN BRACKETS

Type	Nominal Joint Width A	Pan Width B	Total Width C	Visible Width D	Installation Height E	Thermal Movement	Seismic Movement	Load Capacity
NFSJ 100	4 [100]	8 1/16 [205]	12 5/16 [313]	7/8 [22]	2 11/16 [68]	1 37/64 (+25/32-25/32) [40 (+20-20)]	5 33/64 (+1 31/32-3 35/64) [140 (+50-90)]	Pedestrian
NFSJ 150	6 [150]	10 1/16 [255]	14 5/16 [363]	7/8 [22]	2 11/16 [68]	1 37/64 (+25/32-25/32) [40 (+20-20)]	7 31/64 (+1 31/32-5 33/64) [190 (+50-140)]	Pedestrian
NFSJ 200	8 [200]	12 [305]	16 1/4 [413]	7/8 [22]	2 11/16 [68]	1 37/64 (+25/32-25/32) [40 (+20-20)]	9 29/64 (+1 31/32-7 31/64) [240 (+50-190)]	Pedestrian
NFSJ 250	10 [250]	14 [355]	18 1/4 [463]	7/8 [22]	2 11/16 [68]	1 37/64 (+25/32-25/32) [40 (+20-20)]	11 27/64 (+1 31/32-9 29/64) [290 (+50-240)]	Pedestrian
NFSJ 300	12 [300]	15 15/16 [405]	20 3/16 [513]	7/8 [22]	2 11/16 [68]	1 37/64 (+25/32-25/32) [40 (+20-20)]	13 25/64 (+1 31/32-11 27/64) [340 (+50-290)]	Pedestrian
NFSJ 400	16 [400]	19 7/8 [505]	24 1/8 [613]	7/8 [22]	2 11/16 [68]	1 37/64 (+25/32-25/32) [40 (+20-20)]	17 21/64 (+1 31/32-15 23/64) [440 (+50-390)]	Pedestrian

Dimensions and movement values are converted from the source schedule. Model identifiers, material grades and traffic categories are unchanged.

Source PDF page 69

NFSJ-C

SEISMIC EXPANSION JOINT FLOOR TO WALL 4-16 in [100-400 mm] Expansion Gap

Surface	Aluminium Strips Sealant
Gap width(s)	4-16 in [100-400 mm]
Height(s)	2 11/16 in [68 mm]
Metal type(s)	Aluminium 6063, T6
Seal Color(s)	Sealant Colors
Waterproofing	Moisture barrier



SECTION DETAIL

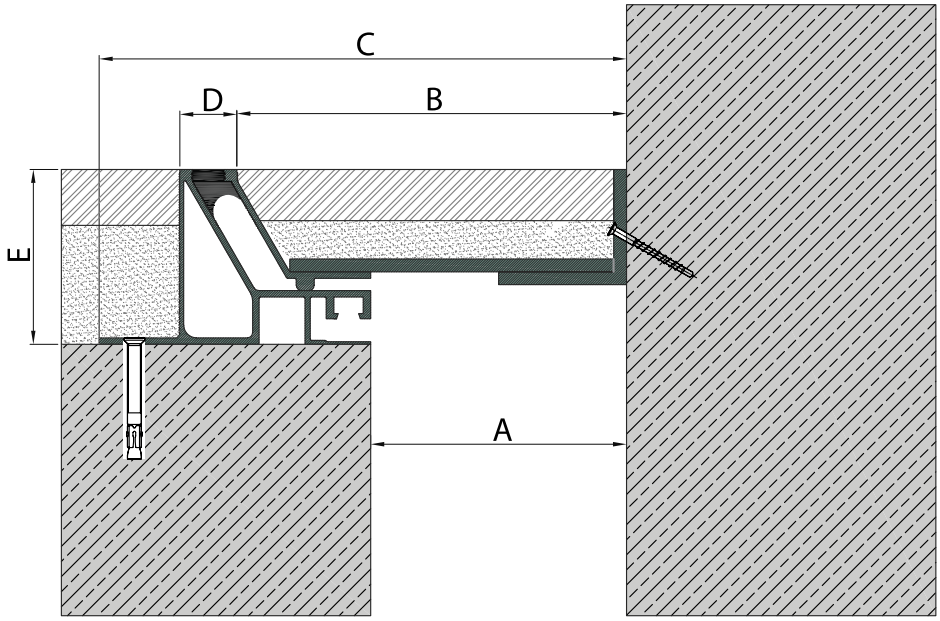

IMPERIAL DIMENSION SCHEDULE

Continued on page 72

NFSJ-C

FRACTIONAL INCHES / ORIGINAL MILLIMETERS IN BRACKETS

Type	Nominal Joint Width A	Pan Width B	Total Width C	Visible Width D	Installation Height E	Thermal Movement	Seismic Movement	Load Capacity
NFSJ 100C	4 [100]	6 [152]	8 1/8 [206]	7/8 [22]	2 11/16 [68]	25/32 (+25/64-25/64) [20 (+10-10)]	4 17/32 (+63/64-3 47/64) [115 (+25-95)]	Pedestrian
NFSJ 150C	6 [150]	7 15/16 [202]	10 1/16 [256]	7/8 [22]	2 11/16 [68]	25/32 (+25/64-25/64) [20 (+10-10)]	6 1/2 (+63/64-5 33/64) [165 (+25-140)]	Pedestrian
NFSJ 200C	8 [200]	9 15/16 [252]	12 1/16 [306]	7/8 [22]	2 11/16 [68]	25/32 (+25/64-25/64) [20 (+10-10)]	8 15/32 (+63/64-7 31/64) [215 (+25-190)]	Pedestrian
NFSJ 250C	10 [250]	11 7/8 [302]	14 [356]	7/8 [22]	2 11/16 [68]	25/32 (+25/64-25/64) [20 (+10-10)]	10 7/16 (+63/64-9 29/64) [265 (+25-240)]	Pedestrian
NFSJ 300C	12 [300]	13 7/8 [352]	16 [406]	7/8 [22]	2 11/16 [68]	25/32 (+25/64-25/64) [20 (+10-10)]	12 13/32 (+63/64-11 27/64) [315 (+25-290)]	Pedestrian
NFSJ 400C	16 [400]	17 13/16 [452]	19 15/16 [506]	7/8 [22]	2 11/16 [68]	25/32 (+25/64-25/64) [20 (+10-10)]	16 11/32 (63/64-15 23/64) [415 (25-390)]	Pedestrian

Dimensions and movement values are converted from the source schedule. Model identifiers, material grades and traffic categories are unchanged.

Source PDF page 70

NFSJ-CS

SEISMIC EXPANSION JOINT FLOOR TO WALL 4-16 in [100-400 mm] Expansion Gap

Surface	Aluminium Strips Sealant
Gap width(s)	4-16 in [100-400 mm]
Height(s)	2 11/16 in [68 mm]
Metal type(s)	Aluminium 6063, T6
Seal Color(s)	Sealant Colors
Waterproofing	Moisture barrier



SECTION DETAIL

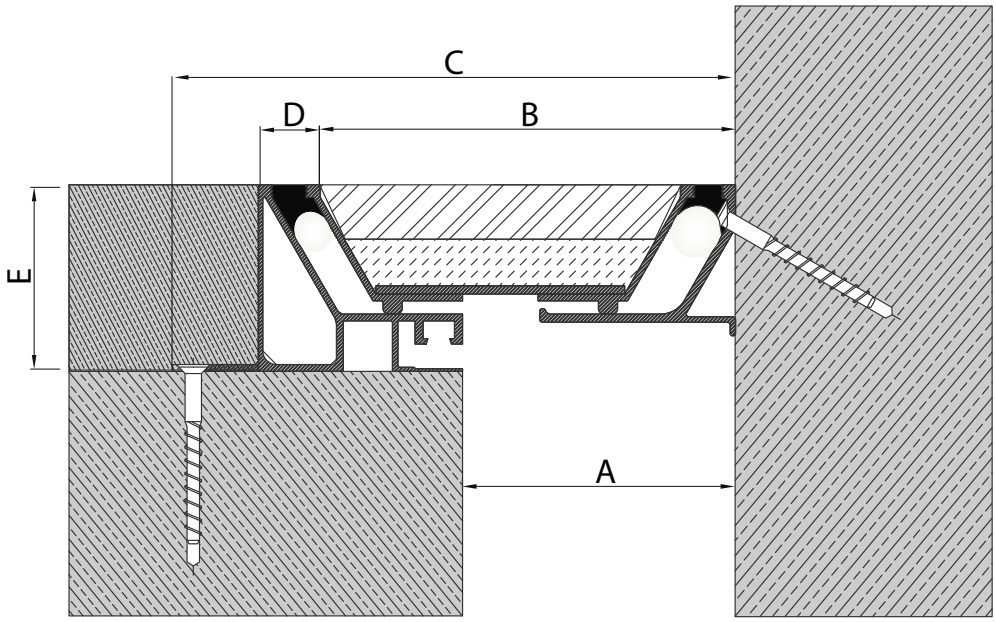

IMPERIAL DIMENSION SCHEDULE

Continued on page 74

NFSJ-CS

FRACTIONAL INCHES / ORIGINAL MILLIMETERS IN BRACKETS

Type	Nominal Joint Width A	Pan Width B	Total Width C	Visible Width D	Installation Height E	Thermal Movement	Seismic Movement	Load Capacity
NFSJ 100CS	4 [100]	6 [152]	8 1/8 [206]	7/8 [22]	2 11/16 [68]	1 37/64 (+25/32-25/32) [40 (+20-20)]	3 35/64 (+1 31/32-1 37/64) [90 (+50-40)]	Pedestrian
NFSJ 150CS	6 [150]	7 15/16 [202]	10 1/16 [256]	7/8 [22]	2 11/16 [68]	1 37/64 (+25/32-25/32) [40 (+20-20)]	5 29/32 (+1 31/32-3 15/16) [150 (+50-100)]	Pedestrian
NFSJ 200CS	8 [200]	9 15/16 [252]	12 1/16 [306]	7/8 [22]	2 11/16 [68]	1 37/64 (+25/32-25/32) [40 (+20-20)]	7 7/8 (+1 31/32-5 29/32) [200 (+50-150)]	Pedestrian
NFSJ 250CS	10 [250]	11 7/8 [302]	14 [356]	7/8 [22]	2 11/16 [68]	1 37/64 (+25/32-25/32) [40 (+20-20)]	9 27/32 (+1 31/32-7 7/8) [250 (+50-200)]	Pedestrian
NFSJ 300CS	12 [300]	13 7/8 [352]	16 [406]	7/8 [22]	2 11/16 [68]	1 37/64 (+25/32-25/32) [40 (+20-20)]	11 13/16 (+1 31/32-9 27/32) [300 (+50-250)]	Pedestrian
NFSJ 400CS	16 [400]	17 13/16 [452]	19 15/16 [506]	7/8 [22]	2 11/16 [68]	1 37/64 (+25/32-25/32) [40 (+20-20)]	15 3/4 (+1 31/32-13 25/32) [400 (+50-350)]	Pedestrian

Dimensions and movement values are converted from the source schedule. Model identifiers, material grades and traffic categories are unchanged.

Source PDF page 71

UBSJ

SEISMIC EXPANSION JOINT FLOOR TO FLOOR 4 - 12 in [100 - 300 mm] Expansion Joint Width

Surface	Solid Aluminium Brushed Finish
Joint width(s)	4 - 12 in [100 - 300 mm]
Height(s)	1 1/4 in [31 mm]
Metal type(s)	Aluminium 6063, T6
Seal Color(s)	Free Seal
Waterproofing	Moisture barrier



SECTION DETAIL

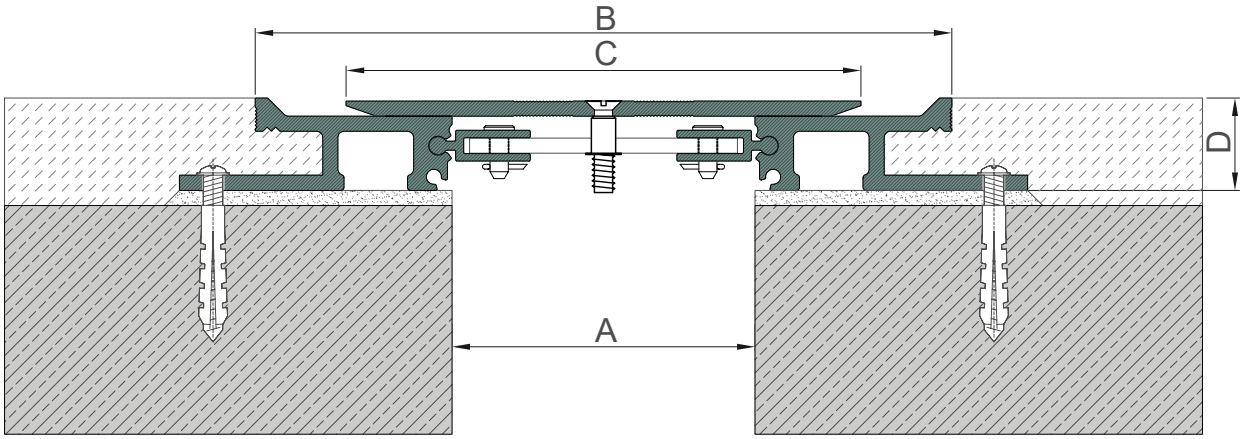

IMPERIAL DIMENSION SCHEDULE

Continued on page 76

UBSJ

FRACTIONAL INCHES / ORIGINAL MILLIMETERS IN BRACKETS

Type	Nominal Joint Width A	Visible Width B	Center Plate Width C	Installation Height D	Thermal Movement	Seismic Movement	Load Capacity
UBSJ 100	4 [100]	9 1/16 [230]	6 11/16 [170]	1 1/4 [31]	2 23/64 (±1 3/16) [60 (±30)]	4 23/32 (+1 31/32-2 3/4) [120 (+50-70)]	Vehicle
UBSJ 150	6 [150]	11 [280]	8 11/16 [220]	1 1/4 [31]	2 23/64 (±1 3/16) [60 (±30)]	6 11/16 (+1 31/32-4 23/32) [170 (+50-120)]	Vehicle
UBSJ 200	8 [200]	13 [330]	10 5/8 [270]	1 1/4 [31]	2 23/64 (±1 3/16) [60 (±30)]	8 21/32 (+1 31/32-6 11/16) [220 (+50-170)]	Vehicle
UBSJ 250	10 [250]	14 15/16 [380]	12 5/8 [320]	1 1/4 [31]	2 23/64 (±1 3/16) [60 (±30)]	10 5/8 (+1 31/32-8 21/32) [270 (+50-220)]	Vehicle
UBSJ 300	12 [300]	16 15/16 [430]	13 3/4 [350]	1 1/4 [31]	2 23/64 (±1 3/16) [60 (±30)]	12 19/32 (+1 31/32-10 5/8) [320 (+50-270)]	Vehicle

Dimensions and movement values are converted from the source schedule. Model identifiers, material grades and traffic categories are unchanged.

Source PDF page 72

UBSJ-C

SEISMIC EXPANSION JOINT FLOOR TO WALL 4 - 12 in [100 - 300 mm] Expansion Joint Width

Surface	Solid Aluminium Brushed Finish
Joint width(s)	4 - 12 in [100 - 300 mm]
Height(s)	1 1/4 in [31 mm]
Metal type(s)	Aluminium 6063, T6
Seal Color(s)	Free Seal
Waterproofing	Moisture barrier



SECTION DETAIL

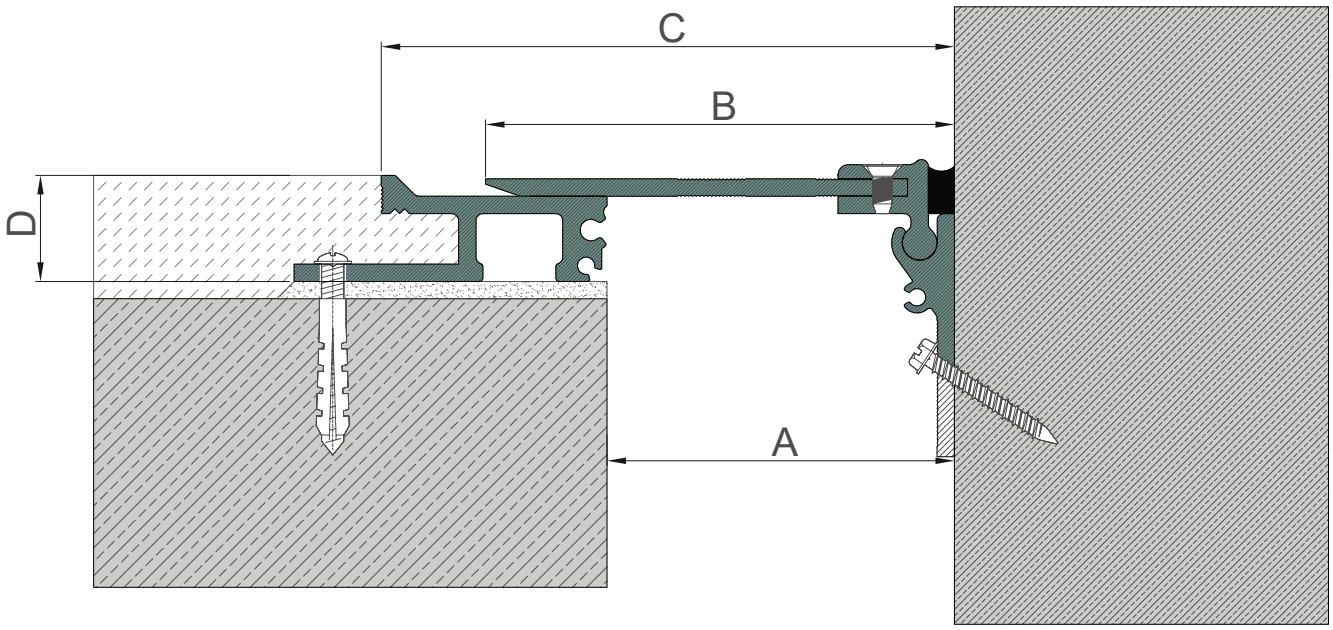

IMPERIAL DIMENSION SCHEDULE

Continued on page 78

UBSJ-C

FRACTIONAL INCHES / ORIGINAL MILLIMETERS IN BRACKETS

Type	Nominal Joint Width A	Centre Plate Width B	Visible Width C	Installation Height D	Thermal Movement E	Seismic Movement	Load Capacity
UBSJ 100C	4 [100]	6 1/2 [165]	7 1/2 [190]	1 1/4 [31]	1 31/32 (±63/64) [50 (±25)]	4 21/64 (+63/64/-3 11/32) [110 (+25/-85)]	Vehicle
UBSJ 150C	6 [150]	8 7/16 [215]	9 7/16 [240]	1 1/4 [31]	1 31/32 (±63/64) [50 (±25)]	4 59/64 (+63/64/-3 15/16) [125 (+25/-100)]	Vehicle
UBSJ 200C	8 [200]	10 7/16 [265]	11 7/16 [290]	1 1/4 [31]	1 31/32 (±63/64) [50 (±25)]	6 57/64 (+63/64/-5 29/32) [175 (+25/-150)]	Vehicle
UBSJ 250C	10 [250]	12 3/8 [315]	13 3/8 [340]	1 1/4 [31]	1 31/32 (±63/64) [50 (±25)]	8 55/64 (+63/64/-7 7/8) [225 (+25/-200)]	Vehicle
UBSJ 300C	12 [300]	14 3/8 [365]	15 3/8 [390]	1 1/4 [31]	1 31/32 (±63/64) [50 (±25)]	10 53/64 (+63/64/-9 27/32) [275 (+25/-250)]	Vehicle

Dimensions and movement values are converted from the source schedule. Model identifiers, material grades and traffic categories are unchanged.

Source PDF page 73

NPS

EXPANSION JOINT FLOOR TO FLOOR 6 - 8 in [150 - 200 mm] Expansion Joint Width

Surface	Solid Aluminium Brushed Finish
Joint width(s)	4 - 12 in [100 - 300 mm]
Height(s)	1 in [25 mm]
Metal type(s)	Aluminium 6063, T6
Seal Color(s)	Free Seal
Waterproofing	Moisture barrier

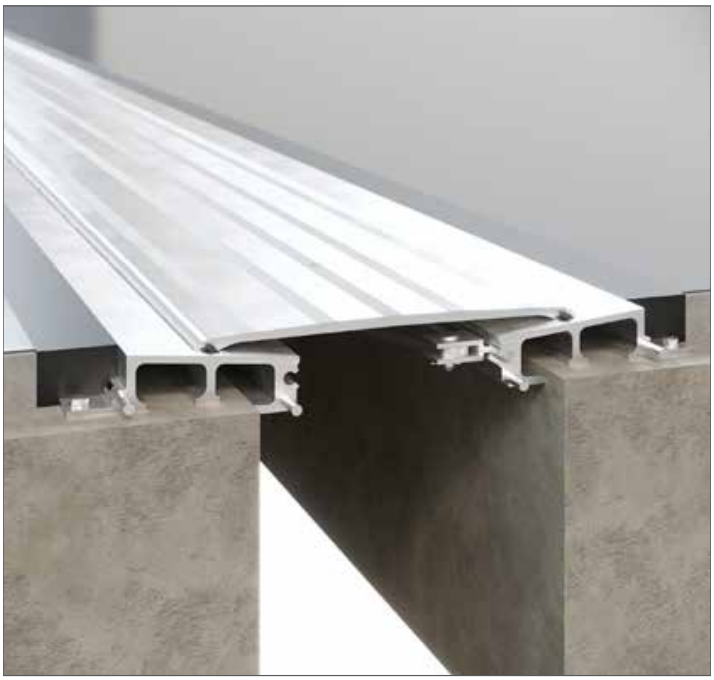

Type	Nominal Joint Width A	Visible Width B	Installation Width C	Installation Height D	Thermal Movement	Seismic Movement	Load Capacity
NPS 150	6 [150]	10 1/4 [261]	12 5/16 [313]	1 [25]	3 15/16 (±1 31/32) [100 (±50)]	5 29/32 (±2 61/64) [150 (±75)]	Private Cars
NPS 200	8 [200]	12 1/4 [311]	14 5/16 [363]	1 [25]	5 29/32 (±2 61/64) [150 (±75)]	7 3/32 (±3 35/64) [180 (±90)]	Private Cars

SECTION DETAIL

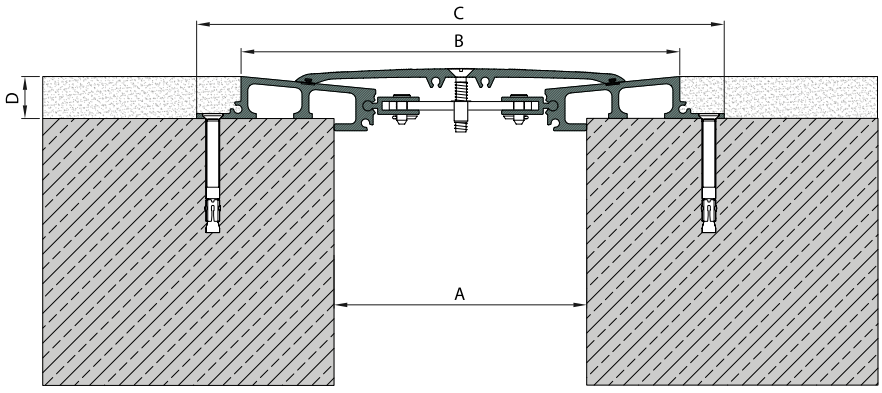

Drawing references correspond to the dimension schedule. Original geometry retained.

Source PDF page 74

NPS-C

EXPANSION JOINT FLOOR TO WALL 6 - 8 in [150 - 200 mm] Expansion Joint Width

Surface	Solid Aluminium Brushed Finish
Joint width(s)	6 - 8 in [150 - 200 mm]
Height(s)	1 in [25 mm]
Metal type(s)	Aluminium 6063, T6
Seal Color(s)	Black
Waterproofing	Moisture barrier



Type	Nominal Joint Width A	Visible Width B	Installation Width C	Installation Height D	Thermal Movement	Seismic Movement	Load Capacity
NPS 150C	6 [150]	8 1/16 [205]	9 1/8 [232]	1 [25]	3 35/64 (+1 37/64-1 31/32) [90(+40-50)]	5 5/16 (+1 49/64-3 35/64) [135 (+45-90)]	Private Cars
NPS 200C	8 [200]	10 1/16 [255]	11 1/8 [282]	1 [25]	3 35/64 (+1 37/64-1 31/32) [90(+40-50)]	5 5/16 (+1 49/64-3 35/64) [135 (+45-90)]	Private Cars

SECTION DETAIL

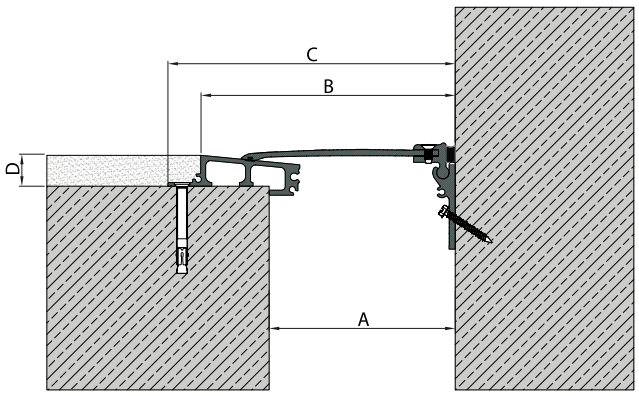

Drawing references correspond to the dimension schedule. Original geometry retained.

Source PDF page 75

NPS 100

EXPANSION JOINT FLOOR TO FLOOR 2 -4 in [50 -100 mm] Expansion Joint Width

Surface	Solid Aluminium Brushed Finish
Gap width(s)	2 - 4 in [50 - 100 mm]
Height(s)	1 1/16 in [27 mm]
Metal type(s)	Aluminium 6063, T6
Seal Color(s)	Black
Waterproofing	Moisture barrier

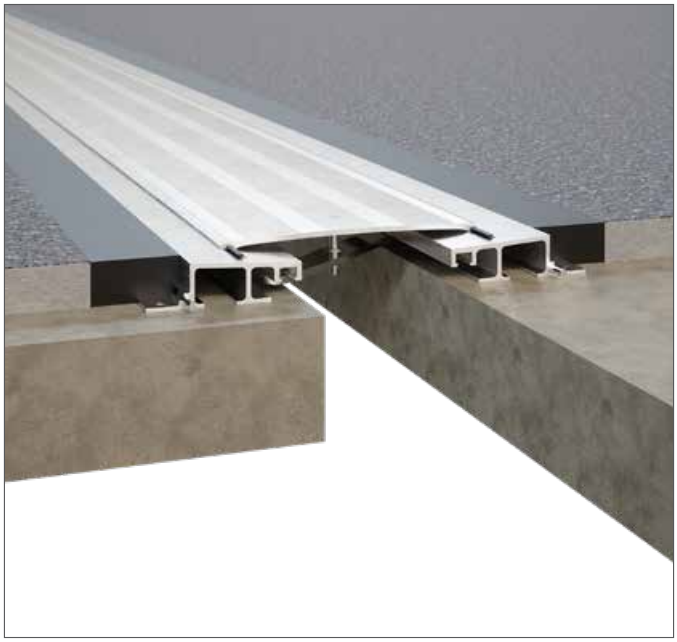

Type	Nominal Joint Width A	Visible Width B	Installation Width C	Installation Height D	Thermal Movement	Seismic Movement	Load Capacity
NPS 50	2 [50]	7 1/2 [190]	9 9/16 [243]	1 1/16 [27]	1 37/64 (±25/32) [40 (±20)]	2 23/64 (±1 3/16) [60 (±30)]	Private Cars
NPS 75	3 [75]	8 7/16 [215]	10 9/16 [268]	1 1/16 [27]	2 23/64 (±1 3/16) [60 (±30)]	3 5/32 (±1 37/64) [80 (±40)]	Private Cars
NPS 100	4 [100]	9 7/16 [240]	11 9/16 [293]	1 1/16 [27]	3 5/32 (±1 37/64) [80 (±40)]	3 15/16 (±1 31/32) [100 (±50)]	Private Cars

SECTION DETAIL

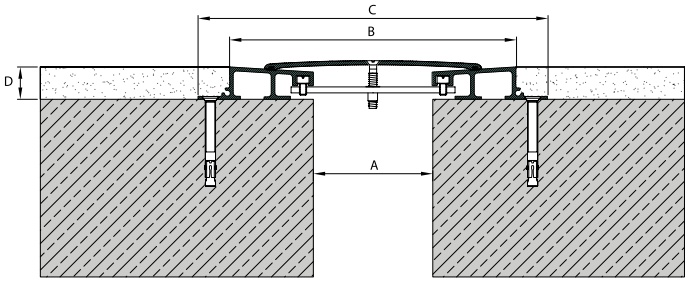

Drawing references correspond to the dimension schedule. Original geometry retained.

Source PDF page 76

NPS 100C

EXPANSION JOINT FLOOR TO WALL 2 -4 in [50 -100 mm] Expansion Joint Width

Surface	Solid aluminum, brushed finish
Gap width(s)	2 - 4 in [50 - 100 mm]
Height(s)	1 1/16 in [27 mm]
Metal type(s)	Aluminum 6063, T6
Seal color(s)	Black
Waterproofing	Moisture barrier

Type	Nominal Joint Width A	Visible Width B	Installation Width C	Installation Height D	Thermal Movement	Seismic Movement	Load Capacity
NPS 50C	2 [50]	4 3/4 [120]	5 3/4 [146]	1 1/16 [27]	2 11/64 (+1 3/16-63/64) [55 (+30-25)]	2 3/4 (+1 37/64-1 3/16) [70 (+40-30)]	Private Cars
NPS 75C	3 [75]	5 11/16 [145]	6 3/4 [171]	1 1/16 [27]	2 23/64 (+1 3/16-1 3/16) [60 (+30-30)]	3 35/64 (+1 37/64-1 31/32) [90 (+40-50)]	Private Cars
EXPANS NPS 100C	SION JOIN 4 [SION JOIN 100]	NT 6 11/16 [NT 170]	7 11/16 [196]	1 1/16 [27]	3 5/32 (+1 3/16-1 31/32) [80 (+30-50)]	4 23/32 (1 37/64-3 5/32) [120 (40-80)]	Private Cars

SECTION DETAIL

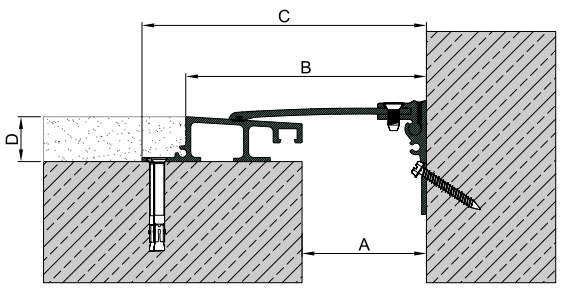

Drawing references correspond to the dimension schedule. Original geometry retained.

Source PDF page 77

UPSJ

EXPANSION JOINT FLOOR TO FLOOR 4 - 12 in [100 - 300 mm] Expansion Joint Width

Surface	Solid Aluminium Brushed Finish
Joint width(s)	4 - 12 in [100 - 300 mm]
Height(s)	3/8 - 1/2 in [9 - 12 mm]
Metal type(s)	Aluminium 6063, T6
Waterproofing	Moisture barrier



SECTION DETAIL

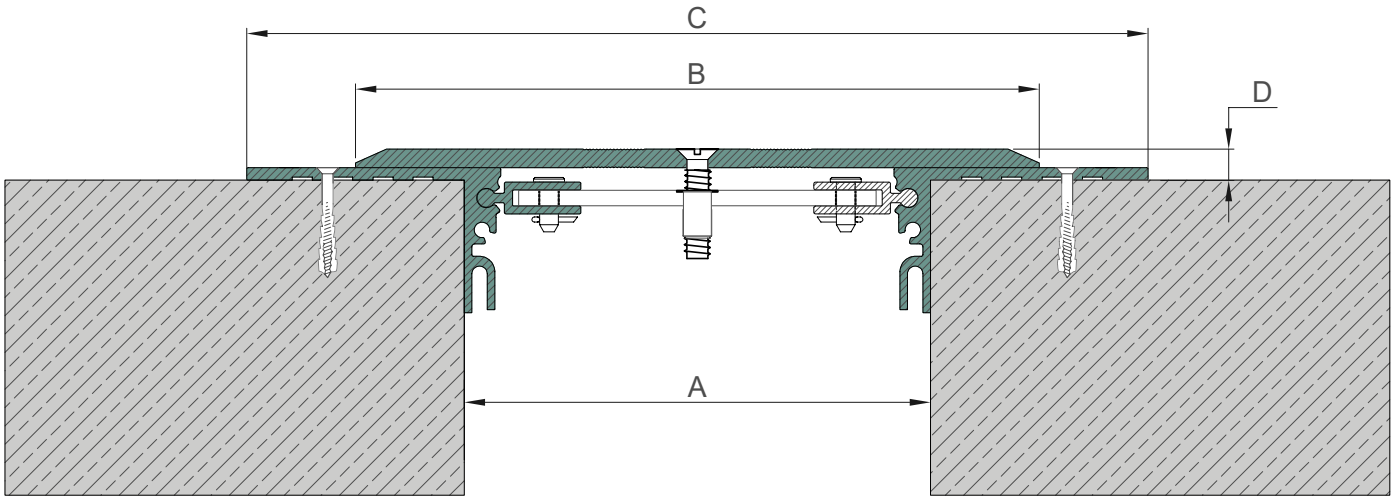

IMPERIAL DIMENSION SCHEDULE

Continued on page 84

UPSJ

FRACTIONAL INCHES / ORIGINAL MILLIMETERS IN BRACKETS

Type	Nominal Joint Width A	Centre Plate Width B	Total Visible Width C	Installation Height D	Thermal Movement	Seismic Movement	Load Capacity
UPSJ 100	4 [100]	6 11/16 [170]	9 7/16 [240]	3/8 [9]	4 23/32 (+2 3/4-1 31/32) [120(+70-50)]	5 29/32 (+3 15/16-1 31/32) [150 (+100-50)]	Vehicle
UPSJ 150	6 [150]	8 11/16 [220]	11 7/16 [290]	3/8 [10]	4 23/32 (+2 3/4-1 31/32) [120(+70-50)]	7 7/8 (+3 15/16-3 15/16) [200 (+100-100)]	Vehicle
UPSJ 200	8 [200]	10 5/8 [270]	13 3/8 [340]	1/2 [12]	4 23/32 (+2 3/4-1 31/32) [120(+70-50)]	9 27/32 (+3 15/16-5 29/32) [250 (+100-150)]	Vehicle
UPSJ 250	10 [250]	12 5/8 [320]	15 3/8 [390]	1/2 [12]	4 23/32 (+2 3/4-1 31/32) [120(+70-50)]	11 13/16 (+3 15/16-7 7/8) [300 (+100-200)]	Vehicle
UPSJ 300	12 [300]	13 3/4 [350]	17 5/16 [440]	1/2 [12]	4 23/32 (+2 3/4-1 31/32) [120(+70-50)]	13 25/32 (+3 15/16-9 27/32) [350 (+100-250)]	Vehicle

Dimensions and movement values are converted from the source schedule. Model identifiers, material grades and traffic categories are unchanged.

Source PDF page 78

UPSJ-C

SEISMIC EXPANSION JOINT FLOOR TO WALL 4-12 in [100-300 mm] Expansion Joint Width

Surface	Solid Aluminium Brushed Finish
Joint width(s)	4 - 12 in [100 - 300 mm]
Height(s)	3/8 - 1/2 in [9 - 12 mm]
Metal type(s)	Aluminium 6063, T6
Waterproofing	Moisture barrier



SECTION DETAIL

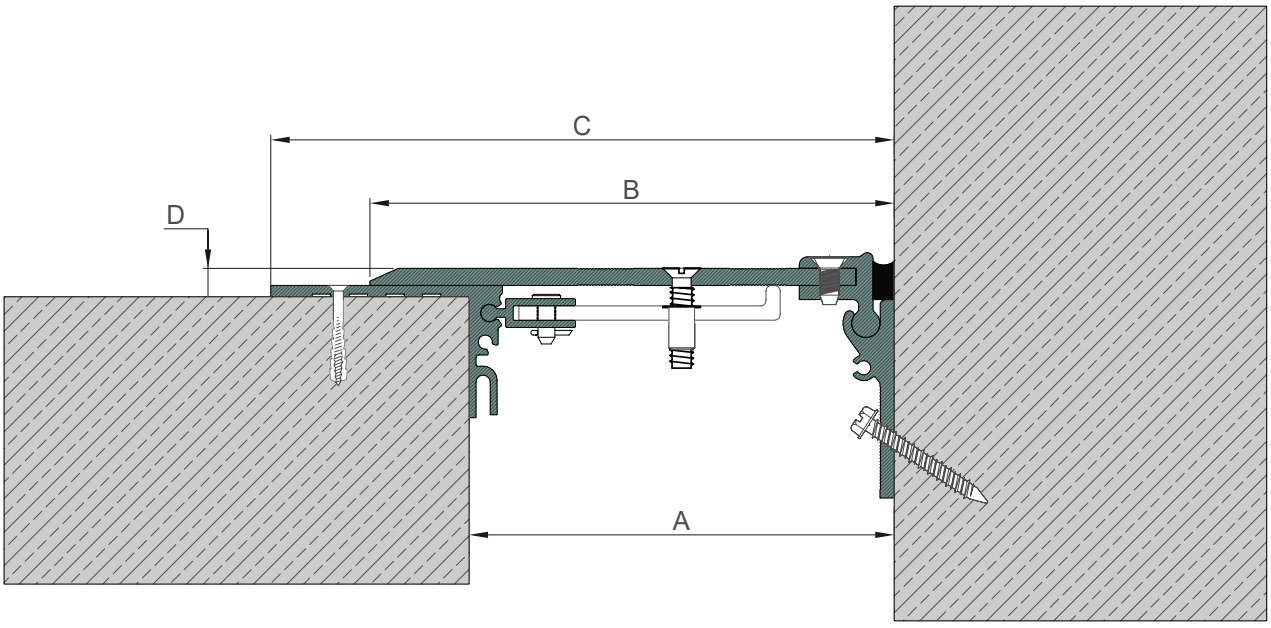

IMPERIAL DIMENSION SCHEDULE

Continued on page 86

UPSJ-C

FRACTIONAL INCHES / ORIGINAL MILLIMETERS IN BRACKETS

Type	Nominal Joint Width A	Centre Plate Width B	Total Visible Width C	Installation Height D	Thermal Movement	Seismic Movement	Load Capacity
UPSJ 100C	4 [100]	5 5/16 [135]	6 11/16 [170]	3/8 [9]	3 35/64 (+1 37/64-1 31/32) [90(+40-50)]	5 29/32 (+3 15/16-1 31/32) [150 (+100-50)]	Vehicle
UPSJ 150C	6 [150]	7 5/16 [185]	8 11/16 [220]	3/8 [10]	3 35/64 (+1 37/64-1 31/32) [90(+40-50)]	7 7/8 (+3 15/16-3 15/16) [200 (+100-100)]	Vehicle
UPSJ 200C	8 [200]	9 1/4 [235]	10 5/8 [270]	1/2 [12]	3 35/64 (+1 37/64-1 31/32) [90(+40-50)]	9 27/32 (+3 15/16-5 29/32) [250 (+100-150)]	Vehicle
UPSJ 250C	10 [250]	11 1/4 [285]	12 5/8 [320]	1/2 [12]	3 35/64 (+1 37/64-1 31/32) [90(+40-50)]	11 13/16 (+3 15/16-7 7/8) [300 (+100-200)]	Vehicle
UPSJ 300C	12 [300]	13 3/16 [335]	14 9/16 [370]	1/2 [12]	3 35/64 (+1 37/64-1 31/32) [90(+40-50)]	13 25/32 (+3 15/16-9 27/32) [350 (+100-250)]	Vehicle

Dimensions and movement values are converted from the source schedule. Model identifiers, material grades and traffic categories are unchanged.

Source PDF page 79

NAC-60

EXPANSION JOINT FLOOR TO FLOOR UPTO 2 3/8 in [60 mm] Expansion Joint Width

Surface	Solid Aluminum
Gap width(s)	UPTO 2 3/8 in [60 mm]
Height(s)	2 3/8 in [60 mm]
Metal type(s)	Aluminium 6063, T6
Seal Color(s)	Free Seal
Waterproofing	Moisture barrier

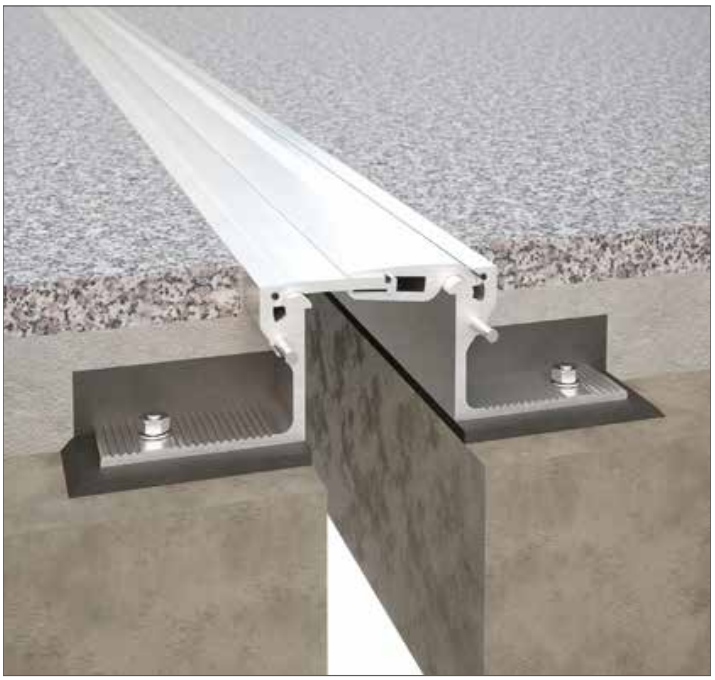

Type	Joint Width A	Visible Width B	Installation Height C	Total Movement	Load Capacity
NAC 60	2 3/8 [60]	3 11/16 [94]	2 3/8 [60]	63/64 (±31/64) [25(±12.5)]	Private Cars

SECTION DETAIL

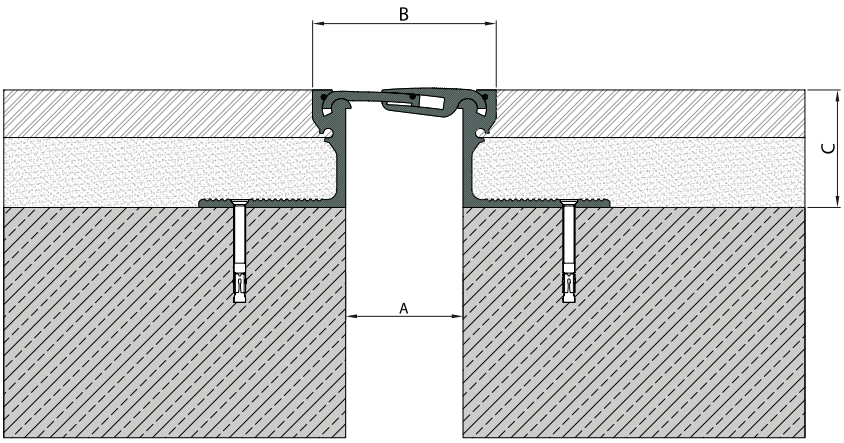

Drawing references correspond to the dimension schedule. Original geometry retained.

Source PDF page 80

NAC-60C

EXPANSION JOINT FLOOR TO WALL UPTO 2 3/8 in [60 mm] Expansion Joint Width

Surface	Solid Aluminum
Gap width(s)	UPTO 2 3/8 in [60 mm]
Height(s)	2 3/8 in [60 mm]
Metal type(s)	Aluminium 6063, T6
Seal Color(s)	Free Seal
Waterproofing	Moisture barrier



Type	Nominal Joint Width A	Visible Width B	Installation Height C	Visible Height D	Total Movement	Load Capacity
NAC 60C	2 3/8 [60]	3 3/4 [95]	2 3/8 [60]	1 15/16 [50]	63/64 (±31/64) [25(±12.5)]	Vehicle

SECTION DETAIL

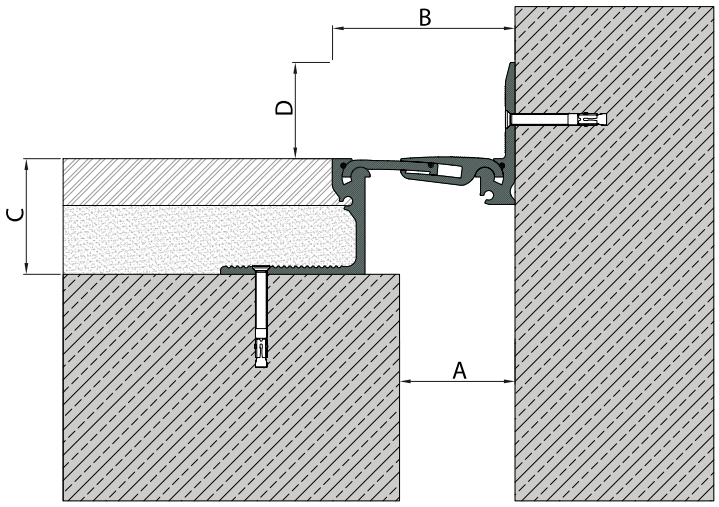

Drawing references correspond to the dimension schedule. Original geometry retained.

Source PDF page 81

NAC

EXPANSION JOINT FLOOR TO FLOOR 4 - 6 in [100 - 150 mm] Expansion Gap

Surface	Solid Aluminum
Gap width(s)	4 - 6 in [100 - 150 mm]
Height(s)	2 3/8 in [60 mm]
Metal type(s)	Aluminium 6063, T6
Seal Color(s)	Free Seal
Waterproofing	Moisture barrier



Type	Joint Width A max	Visible Width B	Installation Height C	Total Movement	Load Capacity
NAC 110	4 5/16 [110]	5 11/16 [145]	2 3/8 [60]	1 31/32 (+63/64-63/64) [50 (+25-25)]	Private Cars
NAC 150	5 7/8 [150]	7 1/4 [184]	2 3/8 [60]	1 31/32 (+63/64-63/64) [50 (+25-25)]	Private Cars

SECTION DETAIL

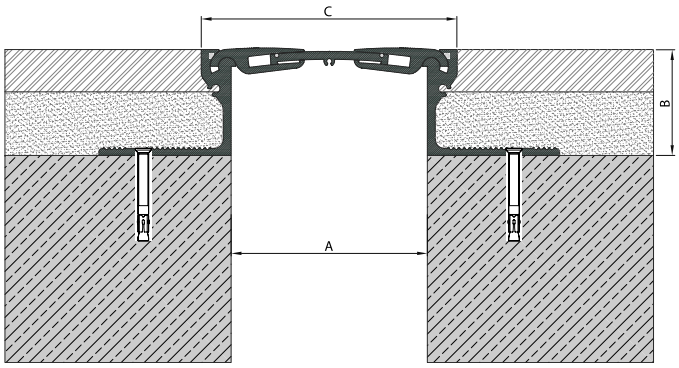

Drawing references correspond to the dimension schedule. Original geometry retained.

Source PDF page 82

NAC-C

EXPANSION JOINT FLOOR TO WALL 4 - 6 in [100 - 150 mm] Expansion Joint Width

Surface	Solid Aluminum
Gap width(s)	4 - 6 in [100 - 150 mm]
Height(s)	2 3/8 in [60 mm]
Metal type(s)	Aluminium 6063, T6
Seal Color(s)	Free Seal
Waterproofing	Moisture barrier



Type	Joint Width A max	Visible Width B	Installation Height C	Visible Height D	Total Movement	Load Capacity
NAC 110C	5 1/16 [128]	5 9/16 [141]	2 3/8 [60]	1 15/16 [50]	1 31/32 (±63/64) [50(±25)]	Vehicle
NAC 150C	6 9/16 [167]	7 1/16 [180]	2 3/8 [60]	1 15/16 [50]	1 31/32 (±63/64) [50(±25)]	Vehicle

SECTION DETAIL

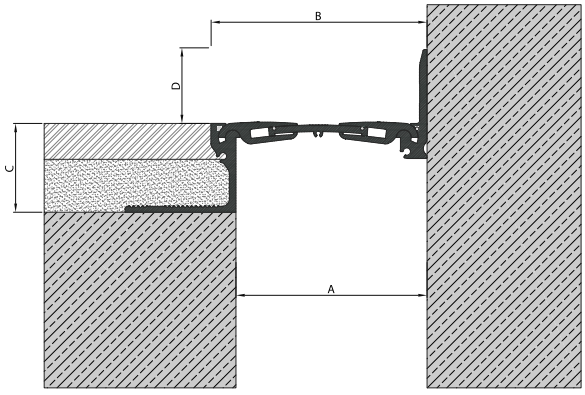

Drawing references correspond to the dimension schedule. Original geometry retained.

Source PDF page 83

NAF

EXPANSION JOINT FLOOR TO FLOOR 4 in [100 mm]
Expansion Joint Width

Surface	Solid Aluminium Brushed Finish
Gap width(s)	UPTO 2 3/8 in [60 mm]
Height(s)	1/4 in [6 mm]
Metal type(s)	Aluminium 6063, T6
Seal Color(s)	Black
Waterproofing	Moisture barrier



Type	Nominal Joint Width A	Visible Width B	Installation Height C	Total Movement	Load Capacity
NAF 100	4 [100]	11 1/4 [286]	1/4 [6]	63/64 (+31/64-31/64) [25 (+12.5-12.5)]	Private Cars

SECTION DETAIL

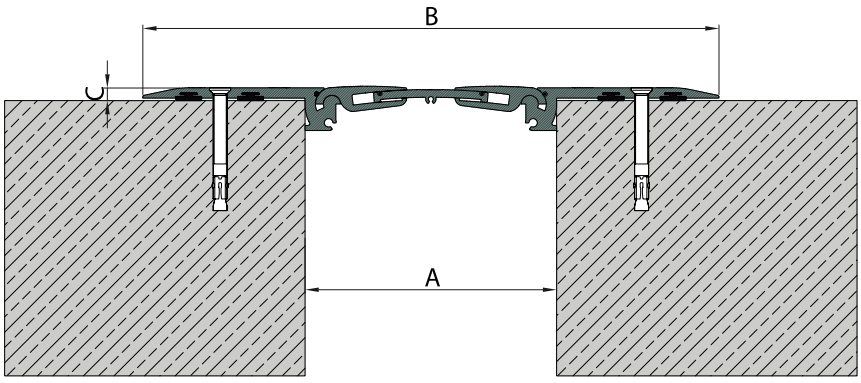

Drawing references correspond to the dimension schedule. Original geometry retained.

Source PDF page 84

NAF-C

EXPANSION JOINT FLOOR TO WALL 4 in [100 mm]
Expansion Joint Width

Surface	Solid Aluminium Brushed Finish
Gap width(s)	UPTO 4 in [100 mm]
Height(s)	1/4 in [6 mm]
Metal type(s)	Aluminium 6063, T6
Seal Color(s)	Black
Waterproofing	Moisture barrier



Type	Nominal Joint Width A	Visible Width B	Visible Height C	Installation Height D	Total Movement	Load Capacity
NAF 100C	4 [100]	7 1/2 [191]	2 3/16 [56]	1/4 [6]	63/64 (+31/64-31/64) [25 (+12.5-12.5)]	Private Cars

SECTION DETAIL

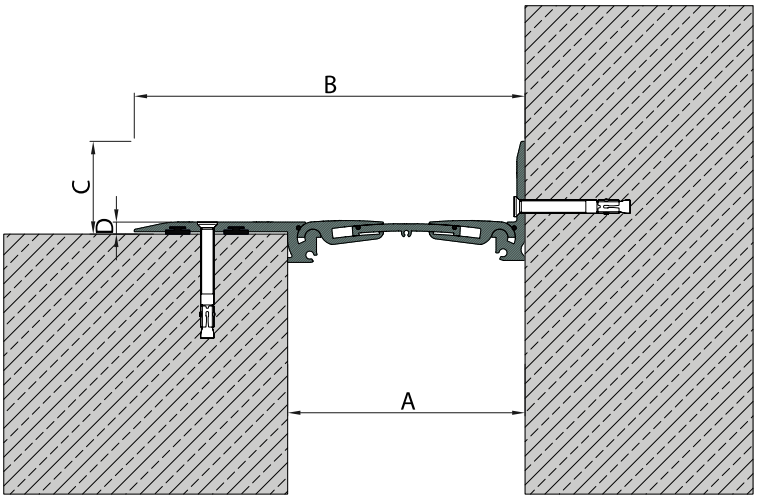

Drawing references correspond to the dimension schedule. Original geometry retained.

Source PDF page 85

NAF

EXPANSION JOINT FLOOR TO FLOOR 6 - 8 in [150 - 200 mm] Expansion Joint Width

Surface	Solid Aluminium Brushed Finish
Gap width(s)	6 - 8 in [150 - 200 mm]
Height(s)	1/4 in [6 mm]
Metal type(s)	Aluminium 6063, T6
Seal Color(s)	Black
Waterproofing	Moisture barrier



Type	Nominal Joint Width A	Visible Width B	Installation Height D	Total Movement	Load Capacity
NAF 150	5 13/16 [147]	13 1/4 [337]	1/4 [6]	1 31/32 (+63/64-63/64) [50 (+25-25)]	Vehicle
NAF 200	7 5/16 [186]	14 13/16 [376]	1/4 [6]	1 31/32 (+63/64-63/64) [50 (+25-25)]	Vehicle

SECTION DETAIL

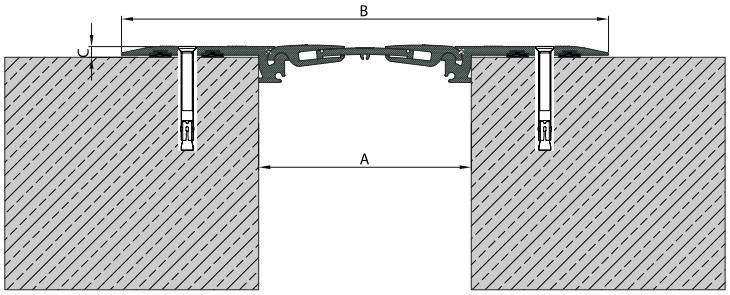

Drawing references correspond to the dimension schedule. Original geometry retained.

Source PDF page 86

NAF-C

EXPANSION JOINT FLOOR TO WALL 6 -8 in [150 -200 mm] Expansion Joint Width

Surface	Solid Aluminium Brushed Finish
Gap width(s)	6 - 8 in [150 - 200 mm]
Height(s)	1/4 in [6 mm]
Metal type(s)	Aluminium 6063, T6
Seal Color(s)	Free Seal
Waterproofing	Moisture barrier



Type	Nominal Joint Width A	Visible Width B	Installation Height C	Visible Height D	Total Movement	Load Capacity
NAF 150C	5 13/16 [147]	9 1/2 [242]	1/4 [6]	1/4 [6]	1 31/32 (+63/64-63/64) [50 (+25-25)]	Vehicle
NAF 200C	7 5/16 [186]	11 1/16 [281]	1/4 [6]	1/4 [6]	1 31/32 (+63/64-63/64) [50 (+25-25)]	Vehicle

SECTION DETAIL

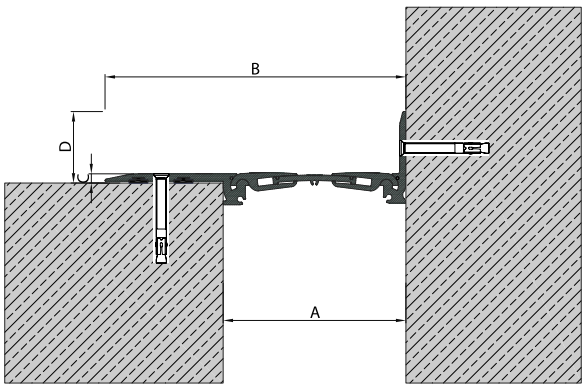

Drawing references correspond to the dimension schedule. Original geometry retained.

Source PDF page 87

NFF

EXPANSION JOINT FLOOR TO FLOOR 2-8 in [50-200 mm] Expansion Gap

Surface	Solid Aluminum
Joint width(s)	2 - 8 in [50 - 200 mm]
Height(s)	1/4 - 1/4 in [6 - 7 mm]
Metal type(s)	Aluminium 6063, T6
Seal Color(s)	Black
Waterproofing	Moisture barrier



SECTION DETAIL

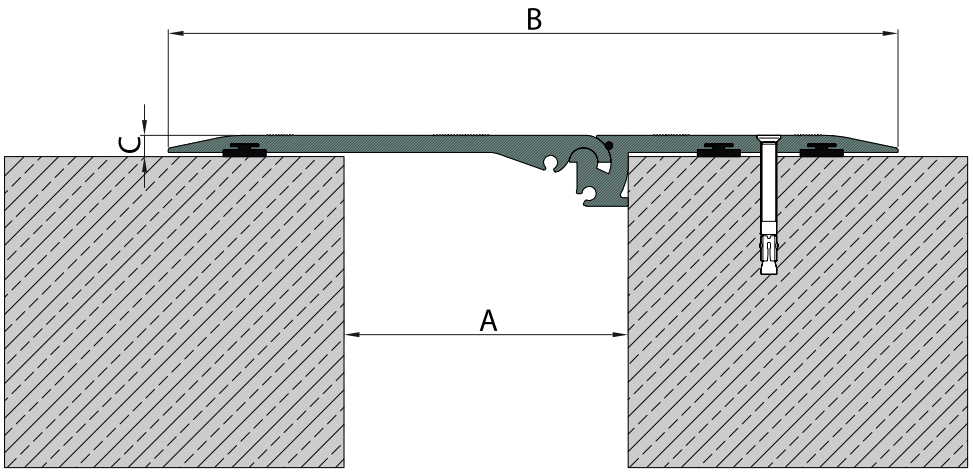

IMPERIAL DIMENSION SCHEDULE

Continued on page 96

NFF

FRACTIONAL INCHES / ORIGINAL MILLIMETERS IN BRACKETS

Type	Nominal Joint Width A	Visible Width B	Installation Height C	Total Movement	Load Capacity
NFF 50	2 [50]	8 1/16 [205]	1/4 [6]	1 31/32 (+63/64-63/64) [50 (+25-25)]	Private Cars
NFF 100	4 [100]	10 1/8 [257]	1/4 [6]	3 1/32 (+1 1/16-1 31/32) [77 (+27-50)]	Private Cars
NFF 150	6 [150]	12 1/2 [317]	1/4 [7]	5 25/64 (+1 29/64-3 15/16) [137 (+37-100)]	Private Cars
NFF 200	8 [200]	14 15/16 [380]	1/4 [7]	7 7/8 (+1 31/32-5 29/32) [200 (+50-150)]	Private Cars

Dimensions and movement values are converted from the source schedule. Model identifiers, material grades and traffic categories are unchanged.

Source PDF page 88

NFF-C

EXPANSION JOINT FLOOR TO WALL 2-8 in [50-200 mm] Expansion Gap

Surface	Solid Aluminum
Joint width(s)	2 - 8 in [50 - 200 mm]
Height(s)	1/4 - 1/4 in [6 - 7 mm]
Metal type(s)	Aluminium 6063, T6
Seal Color(s)	Black
Waterproofing	Moisture barrier



SECTION DETAIL

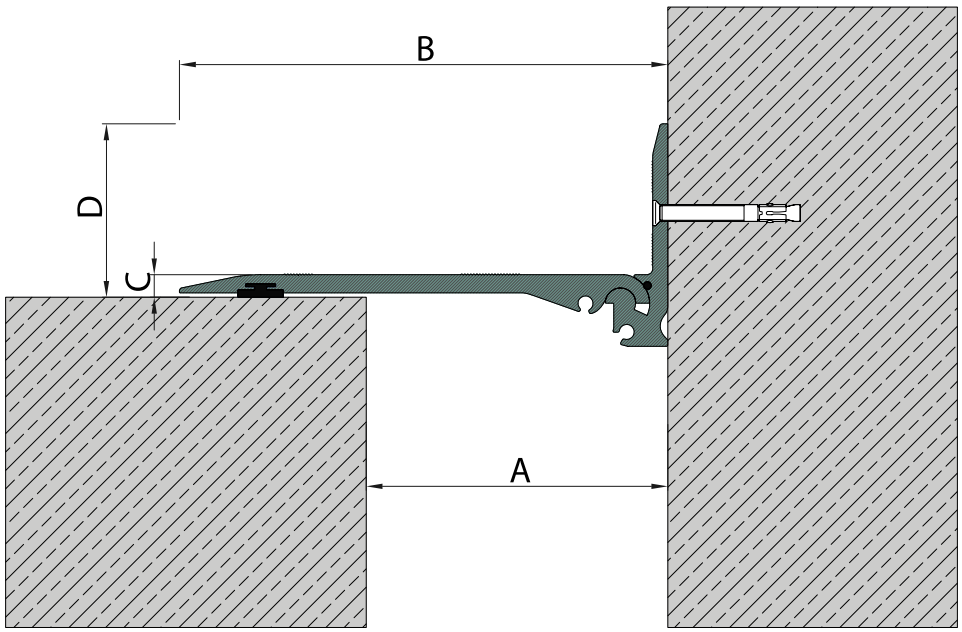

IMPERIAL DIMENSION SCHEDULE

Continued on page 98

NFF-C

FRACTIONAL INCHES / ORIGINAL MILLIMETERS IN BRACKETS

Type	Nominal Joint Width A	Visible Width B	Total Height C	Installation Height D	Total Movement	Load Capacity
NFF 50C	2 [50]	4 5/16 [110]	1/4 [6]	2 1/4 [57]	1 31/32 (+63/64-63/64) [50 (+25-25)]	Private Cars
NFF 100C	4 [100]	6 3/8 [162]	1/4 [6]	2 1/4 [57]	3 1/32 (+1 1/16-1 31/32) [77 (+27-50)]	Private Cars
NFF 150C	6 [150]	8 3/4 [222]	1/4 [7]	2 1/4 [57]	5 25/64 (+1 29/64-3 15/16) [137 (+37-100)]	Private Cars
NFF 200C	8 [200]	11 1/4 [285]	1/4 [7]	2 1/4 [57]	7 7/8 (+1 31/32-5 29/32) [200 (+50-150)]	Private Cars

Dimensions and movement values are converted from the source schedule. Model identifiers, material grades and traffic categories are unchanged.

Source PDF page 89

NZW

EXPANSION JOINT WALL TO WALL 1 3/8 - 3 in [35 - 75 mm] Expansion Gap

Surface	Solid Aluminium
Gap width(s)	1 3/8 - 3 in [35 - 75 mm]
Height(s)	11/16 in [17 mm]
Metal type(s)	Aluminium 6063, T6
Seal Color(s)	Free Seal
Waterproofing	Moisture barrier



Type	Nominal Joint Width A	Visible Width B	Installation Height C	Total Movement
NZW 35	1 3/8 [35]	5 7/8 [150]	11/16 [17]	2 3/4 (+1 37/64-1 3/16) [70 (+40-30)]
NZW 50	2 [50]	6 1/2 [165]	11/16 [17]	3 11/32 (+1 37/64-1 49/64) [85 (+40-45)]
NZW 75	3 [75]	7 1/2 [190]	11/16 [17]	3 11/32 (+1 37/64-1 49/64) [85 (+40-45)]

SECTION DETAIL

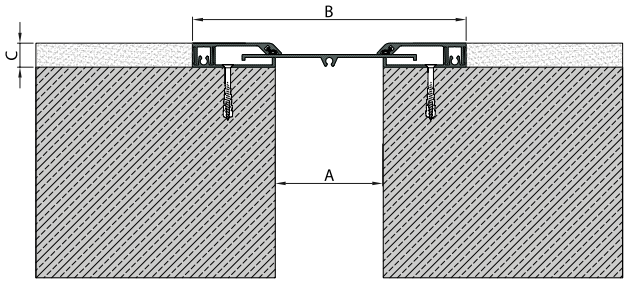

Drawing references correspond to the dimension schedule. Original geometry retained.

Source PDF page 90

NZW-C

EXPANSION JOINT WALL TO CORNER 1 3/8 - 3 in [35 - 75 mm] Expansion Gap

Surface	Solid Aluminium
Gap width(s)	1 3/8 - 3 in [35 - 75 mm]
Height(s)	11/16 in [17 mm]
Metal type(s)	Aluminium 6063, T6
Seal Color(s)	Free Seal
Waterproofing	Moisture barrier



Type	Nominal Joint Width A	Visible Width B	Installation Height C	Total Movement
NZW 35C	1 3/8 [35]	3 5/8 [92]	11/16 [17]	1 37/64 (+25/32-25/32) [40 (+20-20)]
NZW 50C	2 [50]	4 3/16 [107]	11/16 [17]	1 37/64 (+25/32-25/32) [40 (+20-20)]
NZW 75C	3 [75]	5 3/16 [132]	11/16 [17]	1 37/64 (+25/32-25/32) [40 (+20-20)]

SECTION DETAIL

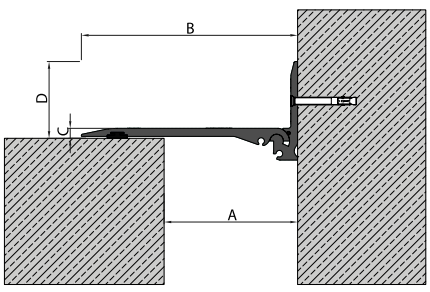

Drawing references correspond to the dimension schedule. Original geometry retained.

Source PDF page 91

UWFJ

EXPANSION JOINT WALL TO WALL 4 - 10 in [100 - 250 mm] Expansion Gap

Surface	Solid Aluminium Brushed Finish
Gap width(s)	4 - 10 in [100 - 250 mm]
Height(s)	11/16 in [17 mm]
Metal type(s)	Aluminium 6063, T6
Waterproofing	Moisture barrier



SECTION DETAIL

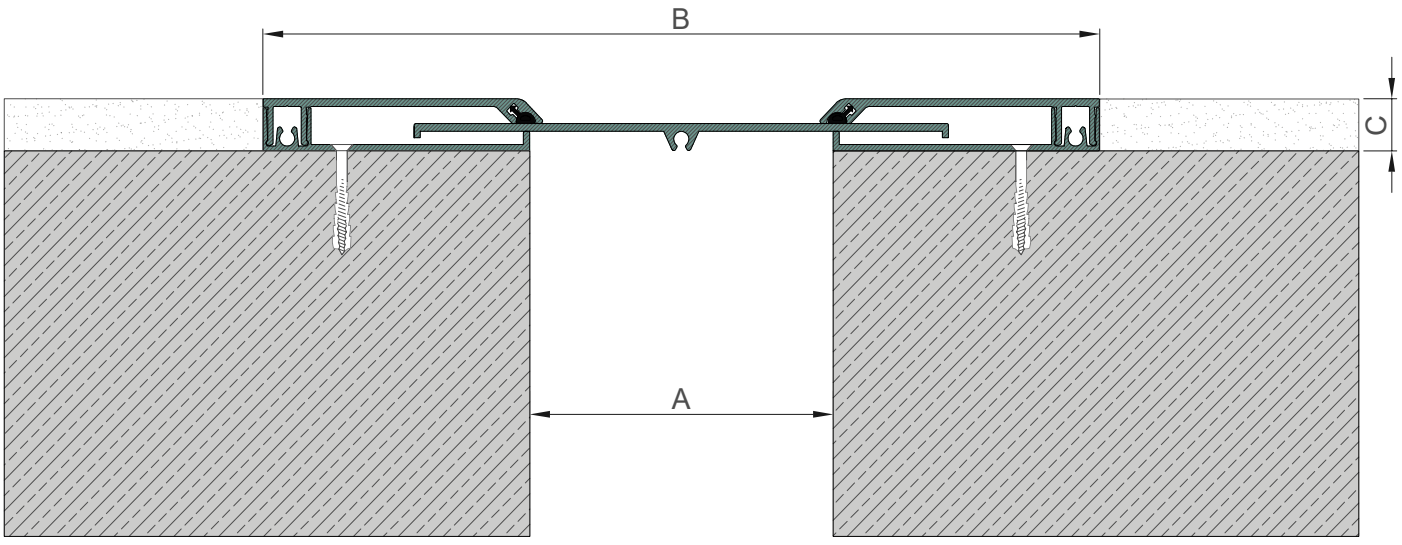

IMPERIAL DIMENSION SCHEDULE

Continued on page 102

UWFJ

FRACTIONAL INCHES / ORIGINAL MILLIMETERS IN BRACKETS

Type	Nominal Joint Width A	Visible Width B	Installation Height C	Total Movement
UWFJ 100	4 [100]	10 13/16 [275]	11/16 [17]	5 33/64 (±2 3/4) [140 (±70)]
UWFJ 150	6 [150]	12 13/16 [325]	11/16 [17]	5 33/64 (±2 3/4) [140 (±70)]
UWFJ 200	8 [200]	14 3/4 [375]	11/16 [17]	5 33/64 (±2 3/4) [140 (±70)]
UWFJ 250	10 [250]	16 3/4 [425]	11/16 [17]	5 33/64 (±2 3/4) [140 (±70)]

Dimensions and movement values are converted from the source schedule. Model identifiers, material grades and traffic categories are unchanged.

Source PDF page 92

UWFJ-C

EXPANSION JOINT WALL TO CORNER 4 - 10 in [100 - 250 mm] Expansion Gap

Surface	Solid Aluminium Brushed Finish
Gap width(s)	4 - 10 in [100 - 250 mm]
Height(s)	11/16 in [17 mm]
Metal type(s)	Aluminium 6063, T6
Waterproofing	Moisture barrier



SECTION DETAIL

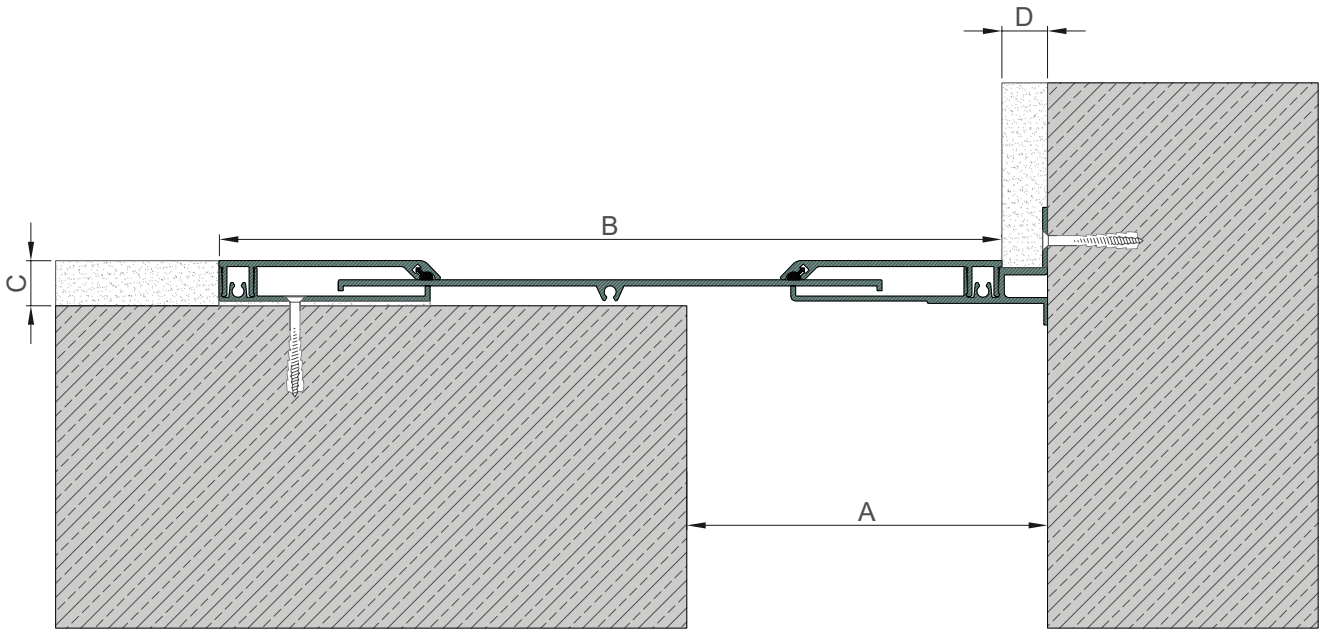

IMPERIAL DIMENSION SCHEDULE

Continued on page 104

UWFJ-C

FRACTIONAL INCHES / ORIGINAL MILLIMETERS IN BRACKETS

Type	Nominal Joint Width A	Visible Width B	Installation Height C	Finishing Height D	Total Movement
UWFJ 100C	4 [100]	10 13/16 [275]	11/16 [17]	11/16 [17]	5 33/64 (±2 3/4) [140 (±70)]
UWFJ 150C	6 [150]	12 13/16 [325]	11/16 [17]	11/16 [17]	5 33/64 (±2 3/4) [140 (±70)]
UWFJ 200C	8 [200]	14 3/4 [375]	11/16 [17]	11/16 [17]	5 33/64 (±2 3/4) [140 (±70)]
UWFJ 250C	10 [250]	16 3/4 [425]	11/16 [17]	11/16 [17]	5 33/64 (±2 3/4) [140 (±70)]

Dimensions and movement values are converted from the source schedule. Model identifiers, material grades and traffic categories are unchanged.

Source PDF page 93

UWAC

EXPANSION JOINT WALL TO WALL 4 - 16 in [100 - 400 mm] Expansion Joint Width

Surface	Solid Aluminium Brushed Finish Powder Coating
Joint width(s)	4 - 16 in [100 - 400 mm]
Height(s)	1/4 in [7 mm]
Metal type(s)	Aluminium 6063, T6
Seal Color(s)	Free Seal
Waterproofing	Moisture barrier

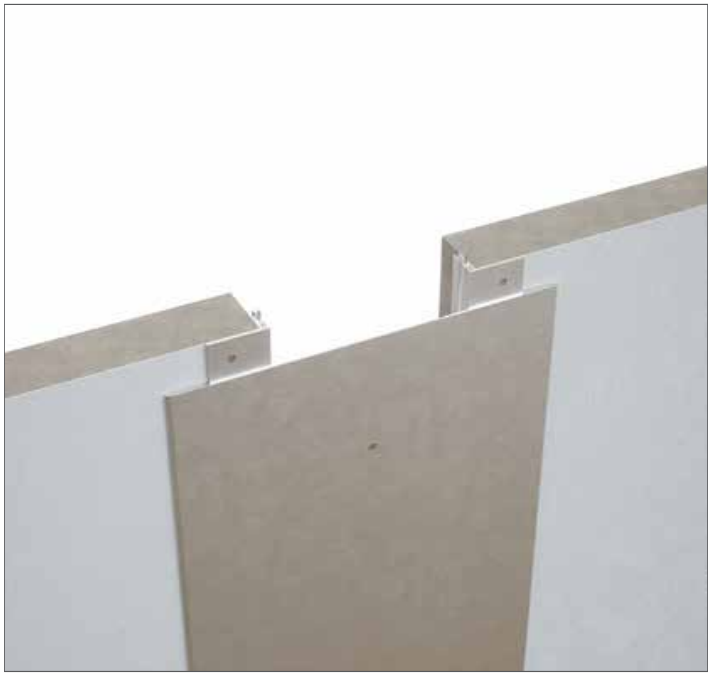

SECTION DETAIL

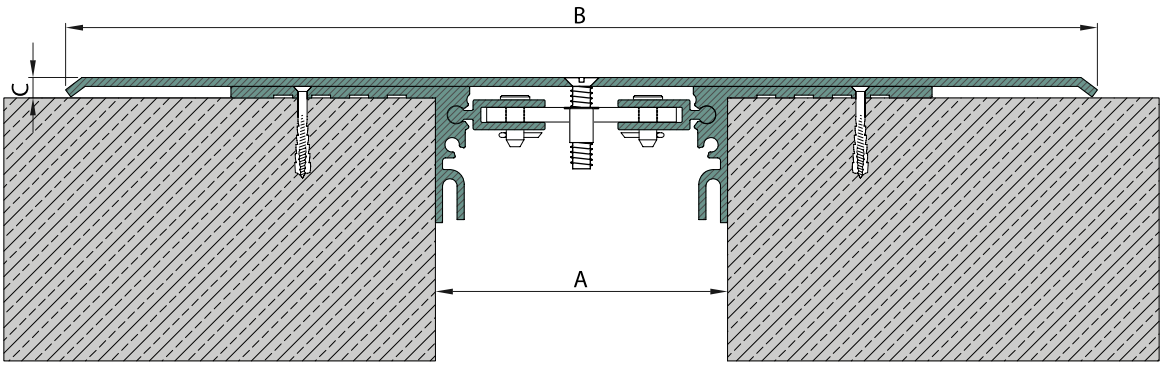

IMPERIAL DIMENSION SCHEDULE

Continued on page 106

UWAC

FRACTIONAL INCHES / ORIGINAL MILLIMETERS IN BRACKETS

Type	Nominal Joint Width A	Visible Width B	Installation Height C	Total Movement
UWAC 100	4 [100]	13 15/16 [354]	1/4 [7]	5 29/32 (+3 15/16-1 31/32) [150(+100-50)]
UWAC 150	6 [150]	15 7/8 [404]	1/4 [7]	7 7/8 (+3 15/16-3 15/16) [200(+100-100)]
UWAC 200	8 [200]	17 7/8 [454]	1/4 [7]	9 27/32 (+3 15/16-5 29/32) [250(+100-150)]
UWAC 250	10 [250]	19 13/16 [504]	1/4 [7]	11 13/16 (+3 15/16-7 7/8) [300(+100-200)]
UWAC 300	12 [300]	21 3/4 [553]	1/4 [7]	13 25/32 (+3 15/16-9 27/32) [350(+100-250)]
UWAC 400	16 [400]	25 3/4 [654]	1/4 [7]	17 23/32 (+3 15/16-13 25/32) [450(+100-350)]

Dimensions and movement values are converted from the source schedule. Model identifiers, material grades and traffic categories are unchanged.

Source PDF page 94

UWAC-C

EXPANSION JOINT WALL TO CORNER 4 - 16 in [100 - 400 mm] Expansion Joint Width

Surface	Solid Aluminium Brushed Finish Powder Coating
Joint width(s)	4 - 16 in [100 - 400 mm]
Height(s)	1/4 in [7 mm]
Metal type(s)	Aluminium 6063, T6
Seal Color(s)	Free Seal
Waterproofing	Moisture barrier



SECTION DETAIL

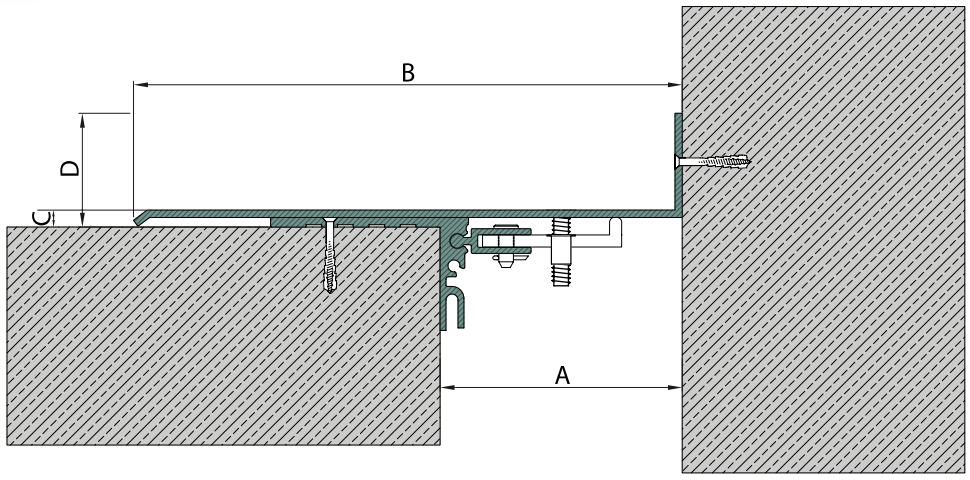

IMPERIAL DIMENSION SCHEDULE

Continued on page 108

UWAC-C

FRACTIONAL INCHES / ORIGINAL MILLIMETERS IN BRACKETS

Type	Nominal Joint Width A	Visible Width B	Installation Height C	Visible Height D	Total Movement
UWAC 100C	4 [100]	8 7/8 [226]	1/4 [7]	1 15/16 [50]	3 15/16 (+1 31/32-1 31/32) [100(+50-50)]
UWAC 150C	6 [150]	10 7/8 [276]	1/4 [7]	1 15/16 [50]	5 29/32 (+1 31/32-3 15/16) [150(+50-100)]
UWAC 200C	8 [200]	12 13/16 [326]	1/4 [7]	1 15/16 [50]	7 7/8 (+1 31/32-5 29/32) [200(+50-150)]
UWAC 250C	10 [250]	14 13/16 [376]	1/4 [7]	1 15/16 [50]	9 27/32 (+1 31/32-7 7/8) [250(+50-200)]
UWAC 300C	12 [300]	16 3/4 [426]	1/4 [7]	1 15/16 [50]	11 13/16 (+1 31/32-9 27/32) [300(+50-250)]
UWAC 400C	16 [400]	20 11/16 [526]	1/4 [7]	1 15/16 [50]	15 3/4 (+1 31/32-13 25/32) [400(+50-350)]

Dimensions and movement values are converted from the source schedule. Model identifiers, material grades and traffic categories are unchanged.

Source PDF page 95

UWAC-S

EXPANSION JOINT WALL TO WALL 4 - 16 in [100 - 400 mm] Expansion Joint Width

Surface	Solid Aluminium Brushed Finish Powder Coating
Gap width(s)	4 - 16 in [100 - 400 mm]
Height(s)	5/16 in [8.5 mm]
Metal type(s)	Aluminium 6063, T6
Seal Color(s)	Black
Waterproofing	Moisture barrier

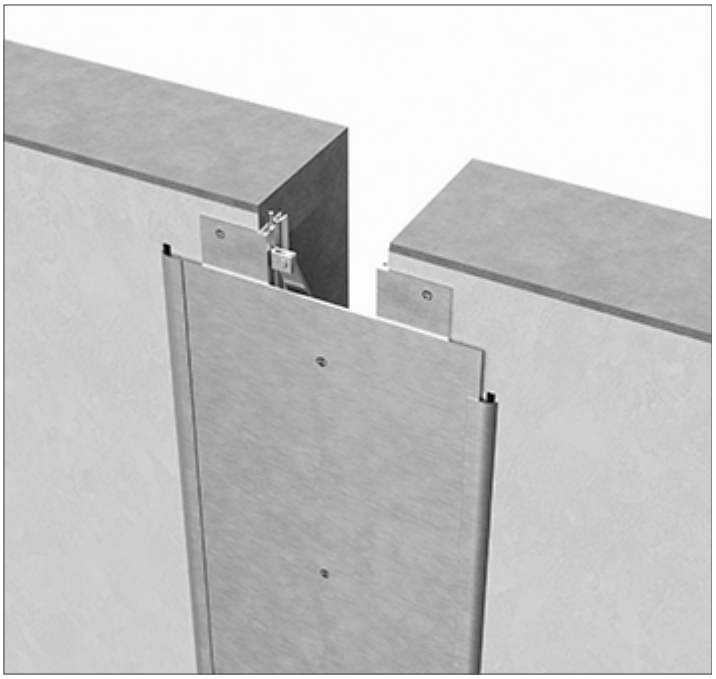

SECTION DETAIL

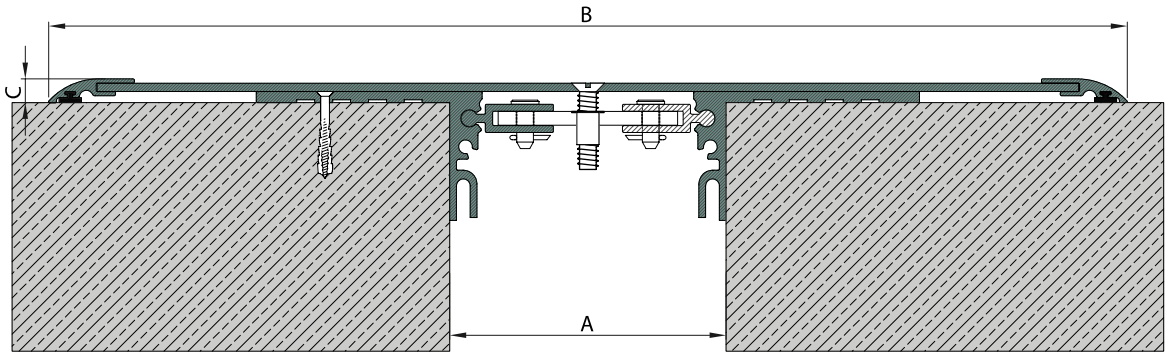

IMPERIAL DIMENSION SCHEDULE

Continued on page 110

UWAC-S

FRACTIONAL INCHES / ORIGINAL MILLIMETERS IN BRACKETS

Type	Nominal Joint Width A	Visible Width B	Installation Height C	Total Movement
UWAC 100S	4 [100]	15 3/8 [390]	5/16 [8.5]	5 29/32 (+3 15/16-1 31/32) [150(+100-50)]
UWAC 150S	6 [150]	17 5/16 [440]	5/16 [8.5]	7 7/8 (+3 15/16-3 15/16) [200(+100-100)]
UWAC 200S	8 [200]	19 5/16 [490]	5/16 [8.5]	9 27/32 (+3 15/16-5 29/32) [250(+100-150)]
UWAC 250S	10 [250]	21 1/4 [540]	5/16 [8.5]	11 13/16 (+3 15/16-7 7/8) [300(+100-200)]
UWAC 300S	12 [300]	23 1/4 [590]	5/16 [8.5]	13 25/32 (+3 15/16-9 27/32) [350(+100-250)]
UWAC 400S	16 [400]	27 3/16 [690]	5/16 [8.5]	17 23/32 (+3 15/16-13 25/32) [450(+100-350)]

Dimensions and movement values are converted from the source schedule. Model identifiers, material grades and traffic categories are unchanged.

Source PDF page 96

UWAC-C S

EXPANSION JOINT WALL TO CORNER 4 - 16 in [100 - 400 mm] Expansion Joint Width

Surface	Solid Aluminium Brushed Finish Powder Coating
Gap width(s)	4 - 16 in [100 - 400 mm]
Height(s)	5/16 in [8.5 mm]
Metal type(s)	Aluminium 6063, T6
Seal Color(s)	Black
Waterproofing	Moisture barrier



SECTION DETAIL

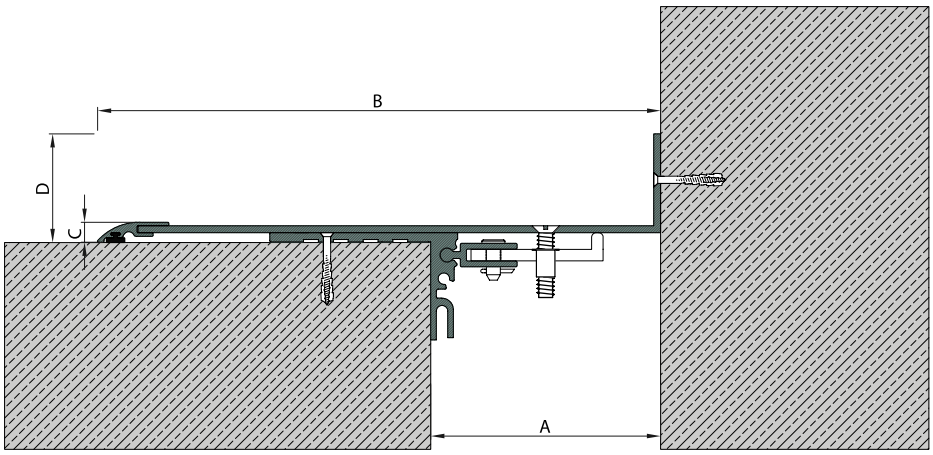

IMPERIAL DIMENSION SCHEDULE

Continued on page 112

UWAC-C S

FRACTIONAL INCHES / ORIGINAL MILLIMETERS IN BRACKETS

Type	Nominal Joint Width A	Visible Width B	Installation Height C	Visible Height D	Total Movement
UWAC 100C S	4 [100]	9 5/8 [245]	5/16 [8.5]	1 7/8 [47]	3 15/16 (+1 31/32-1 31/32) [100(+50-50)]
UWAC 150C S	6 [150]	11 5/8 [295]	5/16 [8.5]	1 7/8 [47]	5 29/32 (+1 31/32-3 15/16) [150(+50-100)]
UWAC 200C S	8 [200]	13 9/16 [345]	5/16 [8.5]	1 7/8 [47]	7 7/8 (+1 31/32-5 29/32) [200(+50-150)]
UWAC 250C S	10 [250]	15 9/16 [395]	5/16 [8.5]	1 7/8 [47]	9 27/32 (+1 31/32-7 7/8) [250(+50-200)]
UWAC 300C S	12 [300]	17 1/2 [445]	5/16 [8.5]	1 7/8 [47]	11 13/16 (+1 31/32-9 27/32) [300(+50-250)]
UWAC 400C S	16 [400]	21 7/16 [545]	5/16 [8.5]	1 7/8 [47]	15 3/4 (+1 31/32-13 25/32) [400(+50-350)]

Dimensions and movement values are converted from the source schedule. Model identifiers, material grades and traffic categories are unchanged.

Source PDF page 97

NWSS

EXPANSION JOINT WALL TO WALL 4 - 16 in [100 - 400 mm] Expansion Joint Width

Surface	Solid Aluminium Brushed Finish Powder Coating
Joint width(s)	4 - 16 in [100 - 400 mm]
Height(s)	3/8 in [9 mm]
Metal type(s)	Aluminium 6063, T6
Seal Color(s)	Free Seal
Waterproofing	Moisture barrier

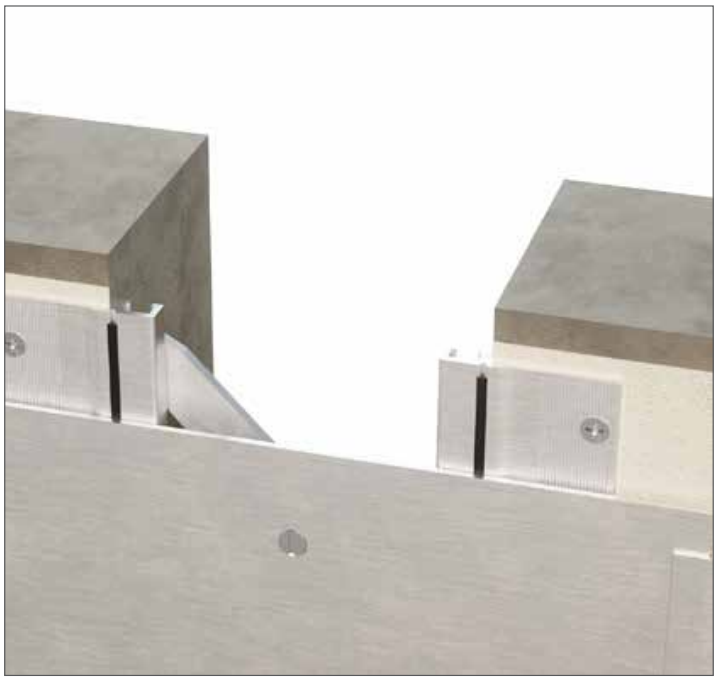

SECTION DETAIL

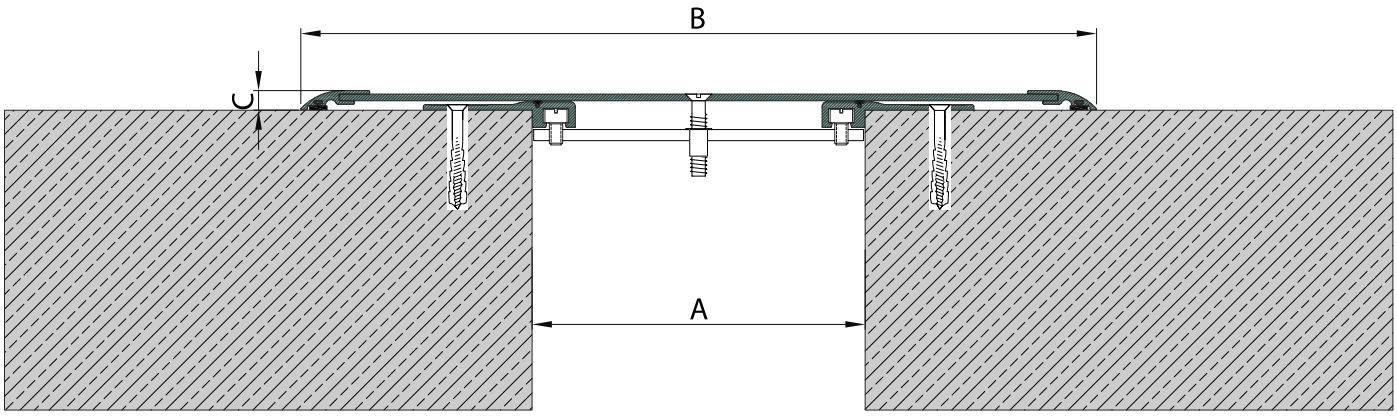

IMPERIAL DIMENSION SCHEDULE

Continued on page 114

NWSS

FRACTIONAL INCHES / ORIGINAL MILLIMETERS IN BRACKETS

Type	Nominal Joint Width A	Visible Width B	Installation Height C	Total Movement
NWSS 100	4 [100]	12 1/8 [308]	3/8 [9]	5 29/32 (+3 15/16-1 31/32) [150(+100-50)]
NWSS 150	6 [150]	14 1/8 [358]	3/8 [9]	7 7/8 (+3 15/16-3 15/16) [200(+100-100)]
NWSS 200	8 [200]	16 1/16 [408]	3/8 [9]	9 27/32 (+3 15/16-5 29/32) [250(+100-150)]
NWSS 250	10 [250]	18 1/16 [458]	3/8 [9]	11 13/16 (+3 15/16-7 7/8) [300(+100-200)]
NWSS 300	12 [300]	20 [508]	3/8 [9]	13 25/32 (+3 15/16-9 27/32) [350(+100-250)]
NWSS 400	16 [400]	23 15/16 [608]	3/8 [9]	17 23/32 (+3 15/16-13 25/32) [450(+100-350)]

Dimensions and movement values are converted from the source schedule. Model identifiers, material grades and traffic categories are unchanged.

Source PDF page 98

NWSS-C

EXPANSION JOINT WALL TO CORNER 4 - 16 in [100 - 400 mm] Expansion Joint Width

Surface	Solid Aluminium Brushed Finish Powder Coating
Joint width(s)	4 - 16 in [100 - 400 mm]
Height(s)	3/8 in [9 mm]
Metal type(s)	Aluminium 6063, T6
Seal Color(s)	Free Seal
Waterproofing	Moisture barrier



SECTION DETAIL

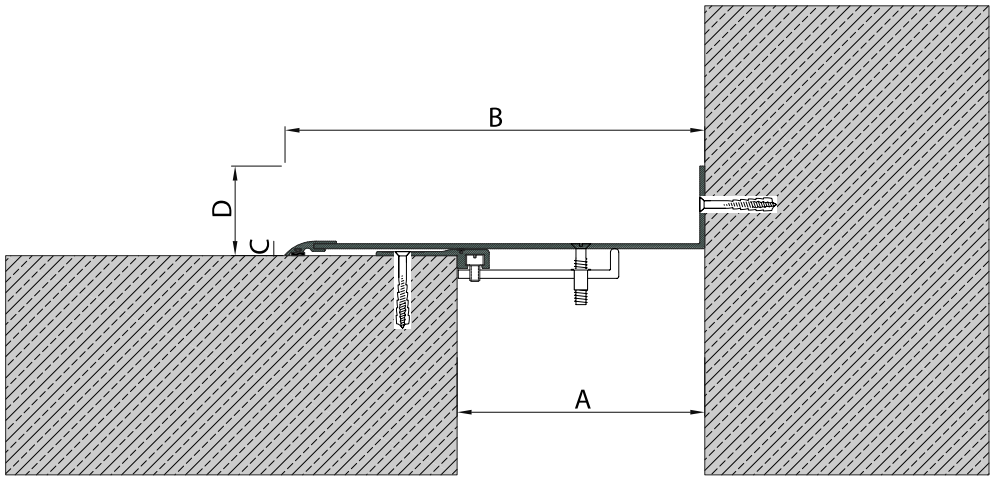

IMPERIAL DIMENSION SCHEDULE

Continued on page 116

NWSS-C

FRACTIONAL INCHES / ORIGINAL MILLIMETERS IN BRACKETS

Type	Nominal Joint Width A	Visible Width B	Installation Height C	Visible Height D	Total Movement
NWSS 100C	4 [100]	8 1/16 [204]	3/8 [9]	2 3/16 [55]	3 15/16 (+1 31/32-1 31/32) [100(+50-50)]
NWSS 150C	6 [150]	10 [254]	3/8 [9]	2 3/16 [55]	5 29/32 (+1 31/32-3 15/16) [150(+50-100)]
NWSS 200C	8 [200]	11 15/16 [304]	3/8 [9]	2 3/16 [55]	7 7/8 (+1 31/32-5 29/32) [200(+50-150)]
NWSS 250C	10 [250]	13 15/16 [354]	3/8 [9]	2 3/16 [55]	9 27/32 (+1 31/32-7 7/8) [250(+50-200)]
NWSS 300C	12 [300]	15 7/8 [404]	3/8 [9]	2 3/16 [55]	11 13/16 (+1 31/32-9 27/32) [300(+50-250)]
NWSS 400C	16 [400]	19 13/16 [504]	3/8 [9]	2 3/16 [55]	15 3/4 (+1 31/32-13 25/32) [400(+50-350)]

Dimensions and movement values are converted from the source schedule. Model identifiers, material grades and traffic categories are unchanged.

Source PDF page 99

UWSJ

SEISMIC EXPANSION JOINT WALL TO WALL 4 - 16 in [100 - 400 mm] Expansion Joint Width

Surface	Aluminium Strip Rubber Seal Wall Finish
Joint width(s)	4 - 16 in [100 - 400 mm]
Height(s)	11/16 in [18 mm]
Metal type(s)	Aluminium 6063, T6
Seal Color(s)	Black, Grey, Beige, White and Brown
Waterproofing	Moisture barrier

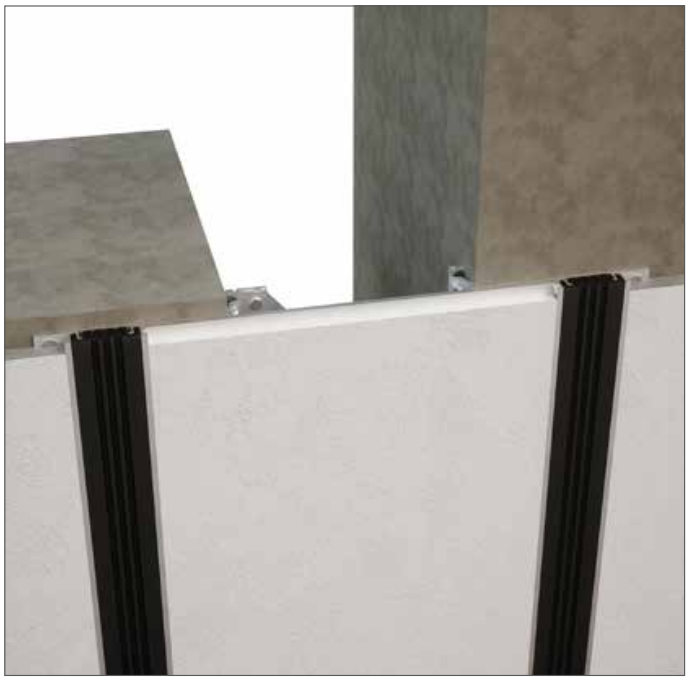

SECTION DETAIL

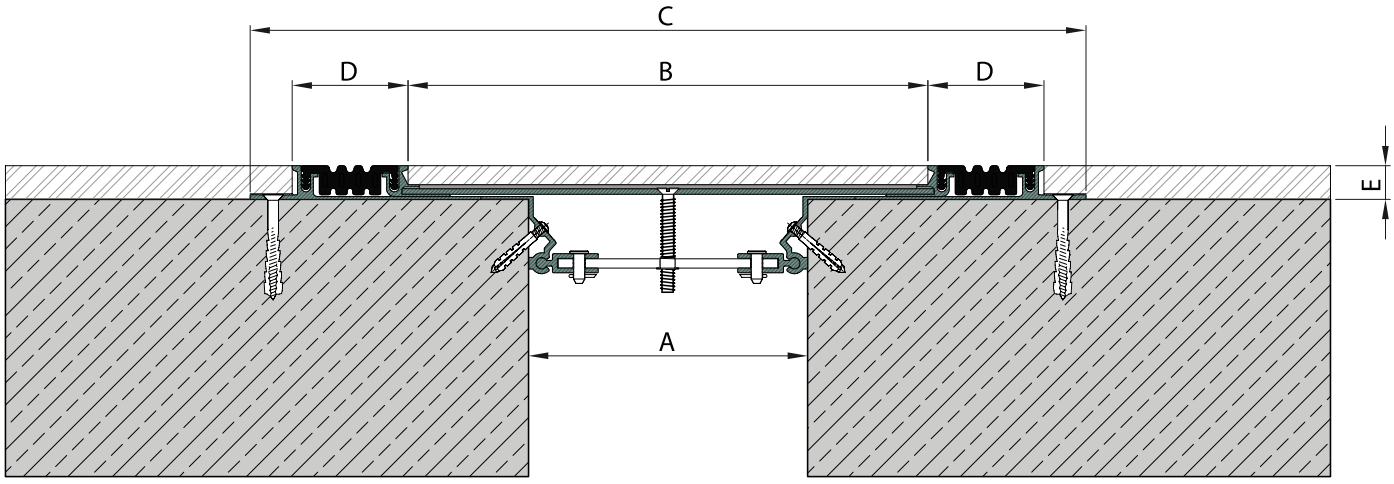

IMPERIAL DIMENSION SCHEDULE

Continued on page 118

Source PDF page 100

UWSJ

FRACTIONAL INCHES / ORIGINAL MILLIMETERS IN BRACKETS

Type	Nominal Joint Width A	Pan Width B	Total Width C	Visible Width D	Installation Height E	Thermal Movement	Seismic Movement
UWSJ 100	4 [100]	9 1/16 [230]	16 5/16 [414]	2 7/16 [62.3]	11/16 [18]	1 31/32 (±63/64) [50(±25)]	7 31/64 (+5 33/64/-1 31/32) [190(+140/-50)]
UWSJ 150	6 [150]	11 [280]	18 1/4 [464]	2 7/16 [62.3]	11/16 [18]	1 31/32 (±63/64) [50(±25)]	9 29/64 (+5 33/64/-3 15/16) [240(+140/-100)]
UWSJ 200	8 [200]	13 [330]	20 1/4 [514]	2 7/16 [62.3]	11/16 [18]	1 31/32 (±63/64) [50(±25)]	11 27/64 (+5 33/64/-5 29/32) [290(+140/-150)]
UWSJ 250	10 [250]	14 15/16 [380]	22 3/16 [564]	2 7/16 [62.3]	11/16 [18]	1 31/32 (±63/64) [50(±25)]	13 25/64 (+5 33/64/-7 7/8) [340(+140/-200)]
UWSJ 300	12 [300]	16 15/16 [430]	24 3/16 [614]	2 7/16 [62.3]	11/16 [18]	1 31/32 (±63/64) [50(±25)]	15 23/64 (+5 33/64/-9 27/32) [390(+140/-250)]
UWSJ 400	16 [400]	20 7/8 [530]	28 1/8 [714]	2 7/16 [62.3]	11/16 [18]	1 31/32 (±63/64) [50(±25)]	19 19/64 (+5 33/64/-13 25/32) [490(+140/-350)]

Dimensions and movement values are converted from the source schedule. Model identifiers, material grades and traffic categories are unchanged.

Source PDF page 100

UWSJ-C

SEISMIC EXPANSION JOINT WALL TO CORNER 4 - 16 in [100 - 400 mm] Expansion Joint Width

Surface	Aluminium Strip Rubber Seal Wall Finish
Joint width(s)	4 - 16 in [100 - 400 mm]
Height(s)	11/16 in [18 mm]
Metal type(s)	Aluminium 6063, T6
Seal Color(s)	Black, Grey, Beige, White and Brown
Waterproofing	Moisture barrier



SECTION DETAIL

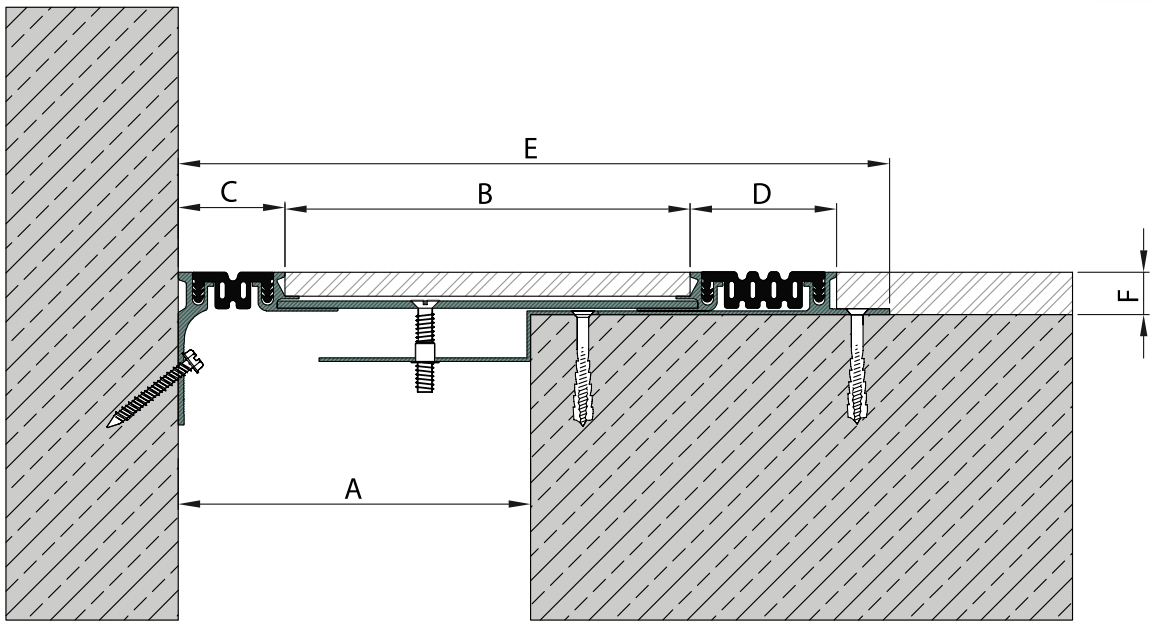

IMPERIAL DIMENSION SCHEDULE

Continued on page 120

UWSJ-C

FRACTIONAL INCHES / ORIGINAL MILLIMETERS IN BRACKETS

Type	Nominal Joint Width A	Pan Width B	Visible Width C	Visible Width D	Total Width E	Installation Height F	Thermal Movement	Seismic Movement
UWSJ 100C	4 [100]	4 13/16 [123]	1 13/16 [45.4]	2 7/16 [62.3]	10 1/4 [260.7]	11/16 [18]	1 37/64 (±25/32) [40(±20)]	4 59/64 (+2 23/64-2 9/16) [125(+60-65)]
UWSJ 150C	6 [150]	6 13/16 [173]	1 13/16 [45.4]	2 7/16 [62.3]	12 1/4 [310.7]	11/16 [18]	1 37/64 (±25/32) [40(±20)]	6 57/64 (+2 23/64-4 17/32) [175(+60-115)]
UWSJ 200C	8 [200]	8 3/4 [223]	1 13/16 [45.4]	2 7/16 [62.3]	14 3/16 [360.7]	11/16 [18]	1 37/64 (±25/32) [40(±20)]	8 55/64 (+2 23/64-6 1/2) [225(+60-165)]
UWSJ 250C	10 [250]	10 3/4 [273]	1 13/16 [45.4]	2 7/16 [62.3]	16 3/16 [410.7]	11/16 [18]	1 37/64 (±25/32) [40(±20)]	10 53/64 (+2 23/64-8 15/32) [275(+60-215)]
UWSJ 300C	12 [300]	12 11/16 [323]	1 13/16 [45.4]	2 7/16 [62.3]	18 1/8 [460.7]	11/16 [18]	1 37/64 (±25/32) [40(±20)]	12 51/64 (+2 23/64-10 7/16) [325(+60-265)]
UWSJ 400C	16 [400]	16 5/8 [423]	1 13/16 [45.4]	2 7/16 [62.3]	22 1/16 [560.7]	11/16 [18]	1 37/64 (±25/32) [40(±20)]	16 47/64 (+2 23/64-14 3/8) [425(+60-365)]

Dimensions and movement values are converted from the source schedule. Model identifiers, material grades and traffic categories are unchanged.

Source PDF page 101

UWXJ

EXPANSION JOINT WALL TO WALL 1 - 1 3/8 in [25 - 35 mm] Expansion Gap

Surface	Aluminium Strips Rubber Seal
Gap width(s)	1 - 1 3/8 in [25 - 35 mm]
Height(s)	5/8 in [16 mm]
Metal type(s)	Aluminium 6063, T6
Seal Color(s)	Black, Grey, Beige, White and brown
Waterproofing	Moisture barrier



Type	Nominal Joint Width A	Installation Height B	Installation Depth C	Total Movement
UWXJ 25	1 [25]	5/8 [16]	1 1/8 [28]	15/32 (+15/64-15/64) [12 (+6-6)]
UWXJ 35	1 3/8 [35]	5/8 [16]	1 1/8 [28]	25/32 (+25/64-25/64) [20 (+10-10)]

SECTION DETAIL

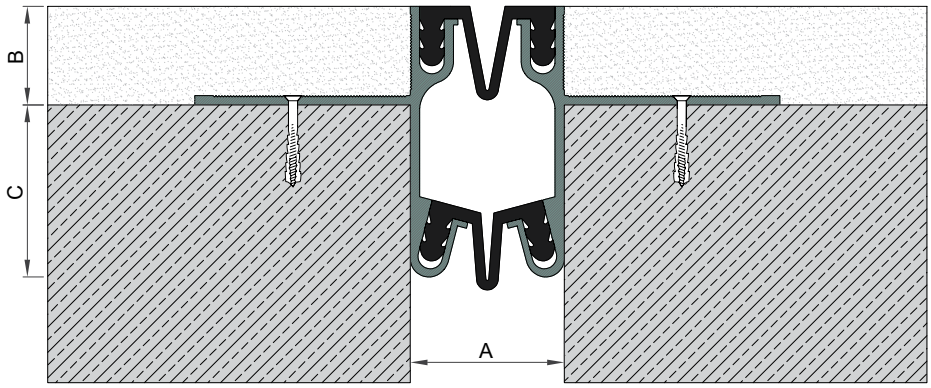

Drawing references correspond to the dimension schedule. Original geometry retained.

Source PDF page 102

UWXJ-C

EXPANSION JOINT WALL TO CORNER 1 - 1 3/8 in [25 - 35 mm] Expansion Gap

Surface	Aluminium Strips Rubber Seal
Gap width(s)	1 - 1 3/8 in [25 - 35 mm]
Height(s)	5/8 in [16 mm]
Metal type(s)	Aluminium 6063, T6
Seal Color(s)	Black, Grey, Beige, White and Brown
Waterproofing	Double rubber



Type	Nominal Joint Width A	Installation Height B	Installation Depth C	Total Movement
UWXJ 25C	1 [25]	5/8 [16]	1 1/8 [28]	15/32 (+15/64-15/64) [12 (+6-6)]
UWXJ 35C	1 3/8 [35]	5/8 [16]	1 1/8 [28]	25/32 (+25/64-25/64) [20 (+10-10)]

SECTION DETAIL

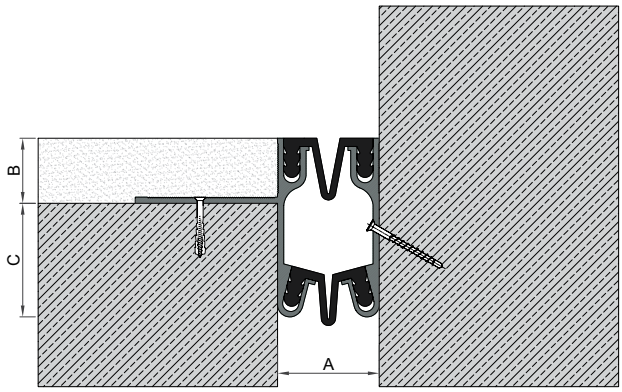

Drawing references correspond to the dimension schedule. Original geometry retained.

Source PDF page 103

UWXJ

EXPANSION JOINT WALL TO WALL 2 - 4 in [50 - 100 mm] Expansion Joint Width

Surface	Rubber Seal
Joint width(s)	2 - 4 in [50 - 100 mm]
Height(s)	2 9/16 in [65 mm]
Metal type(s)	Aluminium 6063, T6
Seal Color(s)	Black, Grey, Beige, White and Brown
Waterproofing	Watertight



Type	Nominal Joint Width A	Installation Depth B	Total Movement
UWXJ 50	2 [50]	2 3/16 [56]	2 9/16 (+1 37/64/-63/64) [65(+40/-25)]
UWXJ 75	3 [75]	2 3/16 [56]	3 35/64 (+1 31/32-1 37/64) [90 (+50-40)]
UWXJ 100	4 [100]	2 3/16 [56]	4 59/64 (+2 3/4/-2 11/64) [125(+70/-55)]

SECTION DETAIL

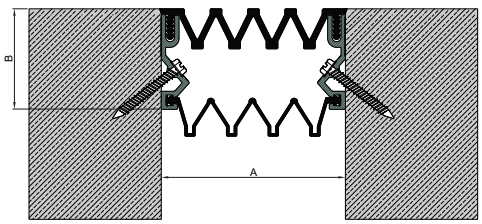

Drawing references correspond to the dimension schedule. Original geometry retained.

Source PDF page 104

UWXJ

EXPANSION JOINT WALL TO WALL 6 - 8 in [150 - 200 mm] Expansion Joint Width

Surface	Rubber Seal
Joint width(s)	6 - 8 in [150 - 200 mm]
Height(s)	2 3/8 in [60 mm]
Metal type(s)	Aluminium 6063, T6
Seal Color(s)	Black, Grey, Beige, White and Brown
Waterproofing	Watertight

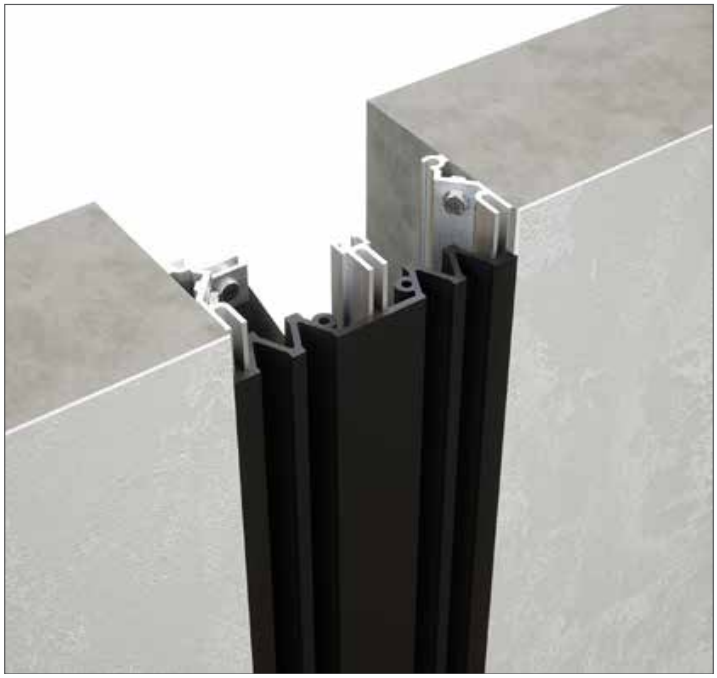

Type	Nominal Joint Width A	Installation Depth B	Total Movement
UWXJ 150	6 [150]	2 3/8 [60]	6 19/64 (+3 35/64/-2 3/4) [160(+90/-70)]
UWXJ 200	8 [200]	2 3/8 [60]	8 21/32 (+5 1/8/-3 35/64) [220(+130/-90)]

SECTION DETAIL

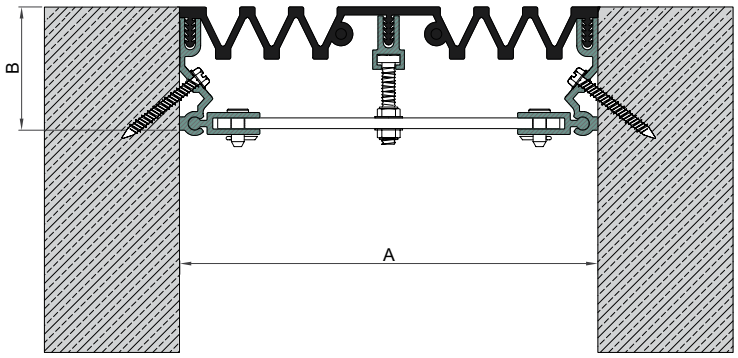

Drawing references correspond to the dimension schedule. Original geometry retained.

Source PDF page 105

UWXJ

EXPANSION JOINT WALL TO WALL 10 - 12 in [250 - 300 mm] Expansion Joint Width

Surface	Rubber Seal
Joint width(s)	10 - 12 in [250 - 300 mm]
Height(s)	2 3/8 in [60 mm]
Metal type(s)	Aluminium 6063, T6
Seal Color(s)	Black, Grey, Beige, White and Brown
Waterproofing	Watertight



Type	Nominal Joint Width A	Installation Depth B	Total Movement
UWXJ 250	10 [250]	2 3/8 [60]	9 29/64 (+5 29/32/-3 35/64) [240(+150/-90)]
UWXJ 300	12 [300]	2 3/8 [60]	9 29/64 (+5 29/32/-3 35/64) [240(+150/-90)]

SECTION DETAIL

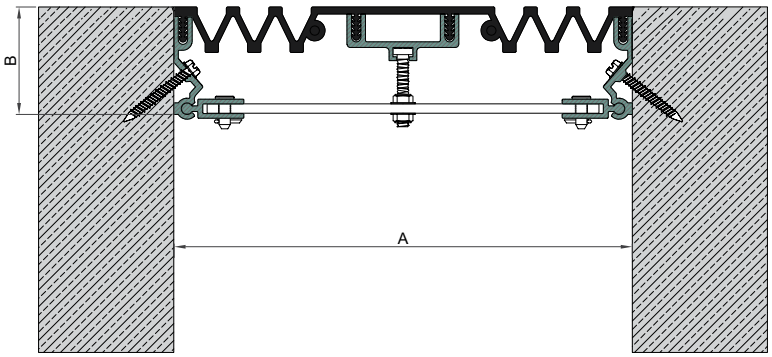

Drawing references correspond to the dimension schedule. Original geometry retained.

Source PDF page 106

MMZ

EXPANSION JOINT FOR WALLS AND CEILINGS - NORMAL AND CORNER 1 - 4 in [25 - 100 mm] Expansion Gap

Surface	Rubber Seal
Gap width(s)	1 - 4 in [25 - 100 mm]
Height(s)	5/16 in [7.5 mm]
Seal Color(s)	Multi Colors

Type	Nominal Joint Width A	Visible Width B	Total Movement
MMZ 25-50	1 - 2 [25 - 50]	5 1/8 [130]	2 23/64 (+1 3/16-1 3/16) [60 (+30-30)]
MMZ 75-100	3 - 4 [75 - 100]	7 7/8 [200]	3 15/16 (+1 31/32-1 31/32) [100 (+50-50)]

SECTION DETAIL

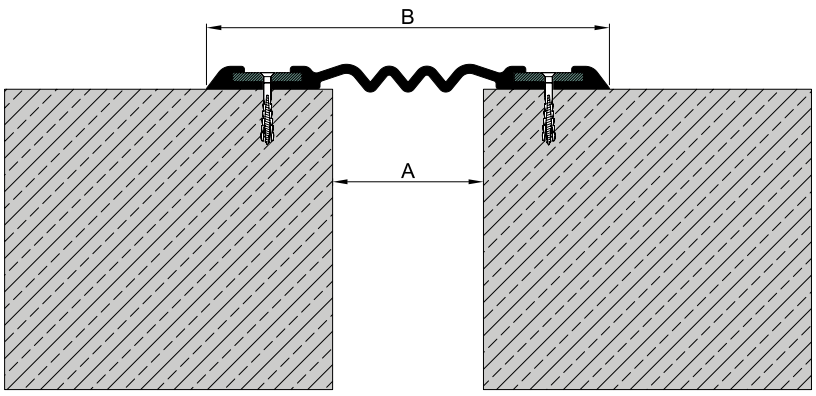

Drawing references correspond to the dimension schedule. Original geometry retained.

Source PDF page 107

NC

EXPANSION JOINT CEILING - CEILING & GYPSUM WALLS 1 - 4 in [25 - 100 mm] Expansion Gap

Surface	Aluminium Strips Rubber Seal
Gap width(s)	1 - 4 in [25 - 100 mm]
Height(s)	1/2 in [12 mm]
Metal type(s)	Aluminium 6063, T6
Seal Color(s)	Black, Grey, Beige, White and Brown



SECTION DETAIL

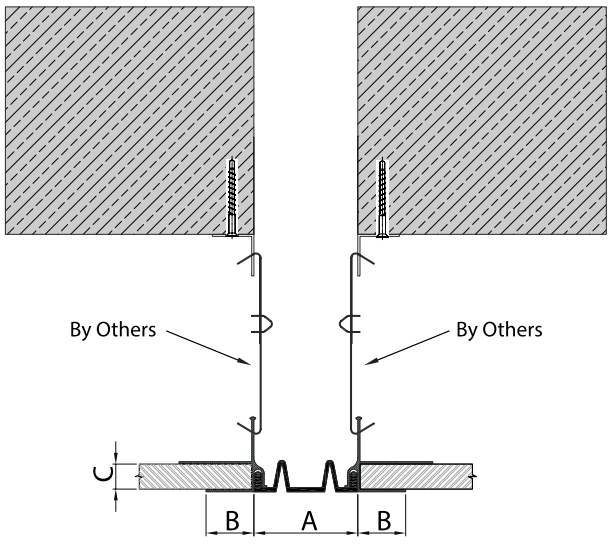

IMPERIAL DIMENSION SCHEDULE

Continued on page 128

NC

FRACTIONAL INCHES / ORIGINAL MILLIMETERS IN BRACKETS

Type	Nominal Joint Width A	Visible Width B	Tile Thickness C	Total Movement
NC 25	1 [25]	7/8 [23]	1/2 [12]	15/32 (+15/64-15/64) [12 (+6-6)]
NC 35	1 3/8 [35]	7/8 [23]	1/2 [12]	25/32 (+25/64-25/64) [20 (+10-10)]
NC 50	2 [50]	7/8 [23]	1/2 [12]	1 3/16 (+19/32-19/32) [30 (+15-15)]
NC 100	4 [100]	7/8 [23]	1/2 [12]	1 31/32 (+63/64-63/64) [50 (+25-25)]

Dimensions and movement values are converted from the source schedule. Model identifiers, material grades and traffic categories are unchanged.

Source PDF page 108

NC-C

EXPANSION JOINT CEILING TO WALL & GYPSUM WALL TO CORNER 1 - 4 in [25 - 100 mm] Expansion Gap

Surface	Aluminium Strip Rubber Seal
Gap width(s)	1 - 4 in [25 - 100 mm]
Height(s)	1/2 in [12 mm]
Metal type(s)	Aluminium 6063, T6
Seal Color(s)	Black, Grey, Beige, White and Brown



SECTION DETAIL

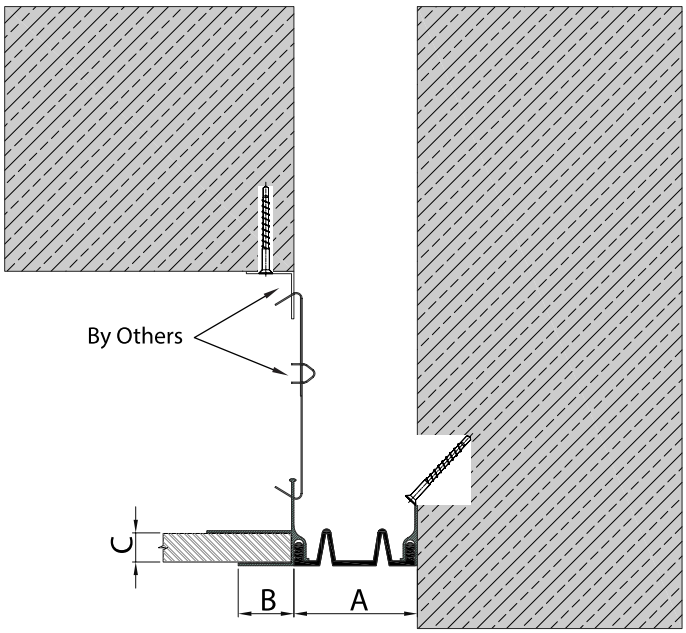

IMPERIAL DIMENSION SCHEDULE

Continued on page 130

Source PDF page 109

NC-C

FRACTIONAL INCHES / ORIGINAL MILLIMETERS IN BRACKETS

Type	Nominal Joint Width A	Visible Width B	Tile Thickness C	Total Movement
NC 25C	1 [25]	7/8 [23]	1/2 [12]	15/32 (+15/64-15/64) [12 (+6-6)]
NC 35C	1 3/8 [35]	7/8 [23]	1/2 [12]	25/32 (+25/64-25/64) [20 (+10-10)]
NC 50C	2 [50]	7/8 [23]	1/2 [12]	1 3/16 (+19/32-19/32) [30 (+15-15)]
NC 100C	4 [100]	7/8 [23]	1/2 [12]	1 31/32 (+63/64-63/64) [50 (+25-25)]

Dimensions and movement values are converted from the source schedule. Model identifiers, material grades and traffic categories are unchanged.

Source PDF page 109

NAL

SEISMIC EXPANSION JOINT Aluminum Cover Plate WALL-WALL & CEILING-CEILING 1 - 3 in [25 - 75 mm] Expansion Gap

Surface Mill Finish Aluminum & Powder Coated

Gap width(s) 1 - 3 in [25 - 75 mm]

Metal type(s) Aluminium 6063, T6



Type	Nominal Joint Width A	Visible Width B	Installation Height C	Total Movement
NAL 25	1 [25]	5 11/16 [145]	1/4 [7]	1 37/64 (+25/32-25/32) [40 (+20-20)]
NAL 50	2 [50]	7 7/8 [200]	1/4 [7]	2 3/4 (+1 3/8-1 3/8) [70 (+35-35)]
NAL 75	3 [75]	9 1/4 [235]	1/4 [7]	3 5/32 (+1 37/64-1 37/64) [80 (+40-40)]

SECTION DETAIL

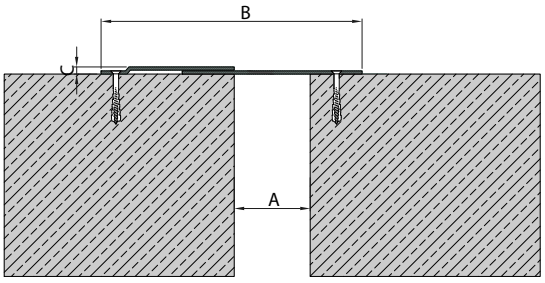

Drawing references correspond to the dimension schedule. Original geometry retained.

Source PDF page 110

NAL-C

SEISMIC EXPANSION JOINT Aluminum Cover Plate WALL-WALL & CEILING-CEILING 1 - 3 in [25 - 75 mm] Expansion Gap

Surface	Mill Finish Aluminum & Powder Coated
Gap width(s)	1 - 3 in [25 - 75 mm]
Metal type(s)	Aluminium 6063, T6



Type	Nominal Joint Width A	Visible Width B	Installation Height C	Visible Height D	Total Movement
NAL 25C	1 [25]	3 11/16 [93.2]	1/4 [7]	1 11/16 [43]	1 37/64 (+25/32-25/32) [40 (+20-20)]
NAL 50C	2 [50]	5 13/16 [148.2]	1/4 [7]	1 11/16 [43]	2 3/4 (+1 3/8-1 3/8) [70 (+35-35)]
NAL 75C	3 [75]	11 1/8 [283.2]	1/4 [7]	1 11/16 [43]	3 5/32 (+5/32-1 37/64) [80 (+4-40)]

SECTION DETAIL

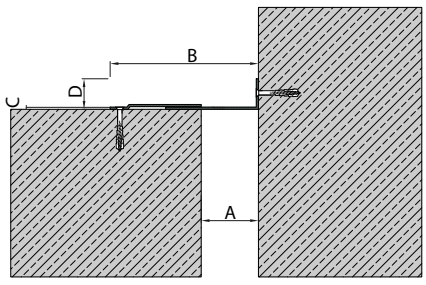

Drawing references correspond to the dimension schedule. Original geometry retained.

Source PDF page 111

NAL 100

SEISMIC EXPANSION JOINT CEILING TO CEILING ; WALL TO WALL 4 - 16 in [100 - 400 mm] Expansion Gap



Surface	Mill Finish Aluminum & Powder Coated
Gap width(s)	4 - 16 in [100 - 400 mm]
Metal type(s)	Aluminium 6063, T6

SECTION DETAIL

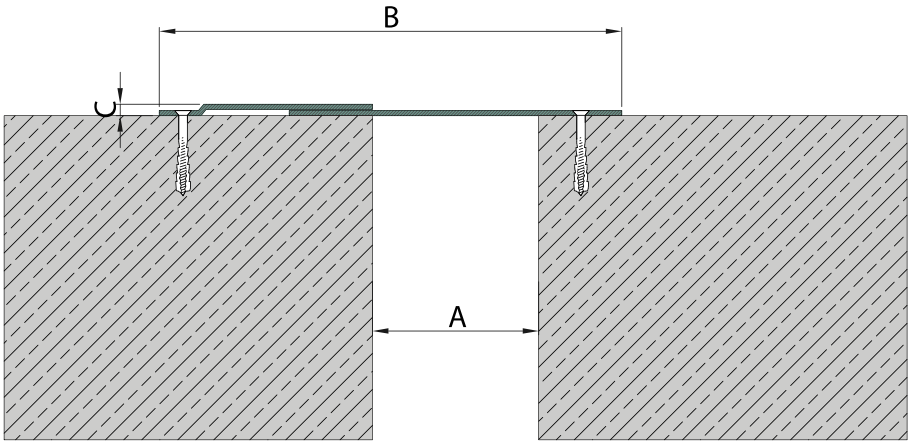

IMPERIAL DIMENSION SCHEDULE

Continued on page 134

NAL 100

FRACTIONAL INCHES / ORIGINAL MILLIMETERS IN BRACKETS

Type	Nominal Joint Width A	Visible Width B	Visible Width C	Total Movement
NAL 100	4 [100]	10 15/16 [278]	1/4 [7]	3 15/16 (+1 31/32-1 31/32) [100 (+50-50)]
NAL 150	6 [150]	12 15/16 [328]	1/4 [7]	3 15/16 (+1 31/32-1 31/32) [100 (+50-50)]
NAL 200	8 [200]	14 7/8 [378]	1/4 [7]	3 15/16 (+1 31/32-1 31/32) [100 (+50-50)]
NAL 250	10 [250]	18 13/16 [478]	1/4 [7]	5 29/32 (+2 61/64-2 61/64) [150 (+75-75)]
NAL 300	12 [300]	20 13/16 [528]	1/4 [7]	5 29/32 (+2 61/64-2 61/64) [150 (+75-75)]
NAL 400	16 [400]	24 3/4 [628]	1/4 [7]	5 29/32 (+2 61/64-2 61/64) [150 (+75-75)]

Dimensions and movement values are converted from the source schedule. Model identifiers, material grades and traffic categories are unchanged.

Source PDF page 112

NAL 100-C

SEISMIC EXPANSION JOINT CEILING TO WALL ; WALL TO CORNER 4 - 16 in [100 - 400 mm] Expansion Gap

Surface	Mill Finish Aluminum & Powder Coated
Gap width(s)	4 - 16 in [100 - 400 mm]
Metal type(s)	Aluminium 6063, T6



SECTION DETAIL

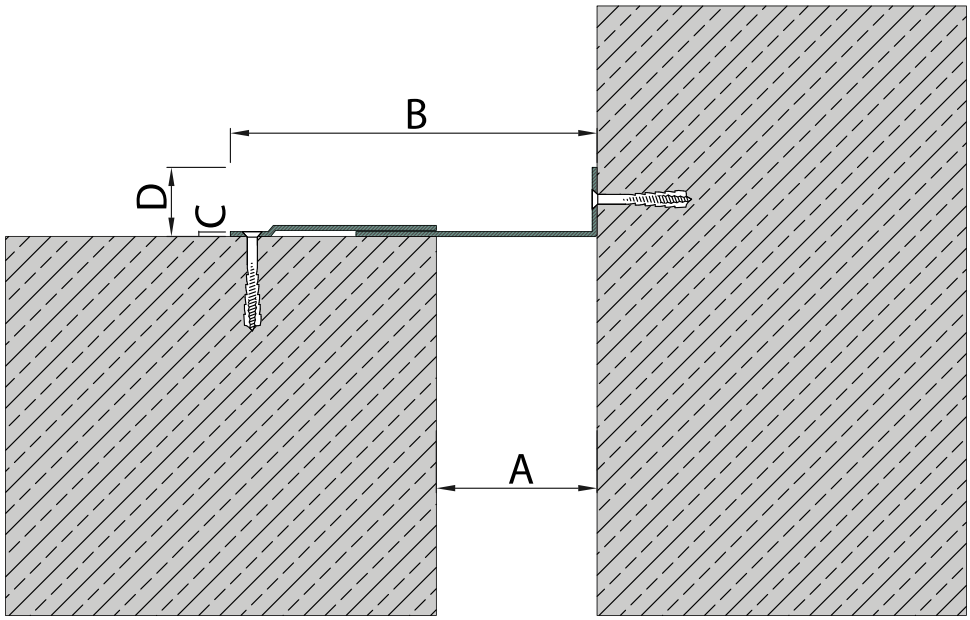

IMPERIAL DIMENSION SCHEDULE

Continued on page 136

NAL 100-C

FRACTIONAL INCHES / ORIGINAL MILLIMETERS IN BRACKETS

Type	Nominal Joint Width A	Visible Width B	Installtion Height C	Visible Height D	Total Movement
NAL 100C	4 [100]	10 15/16 [278]	1/4 [7]	1 11/16 [43]	3 15/16 (+1 31/32-1 31/32) [100 (+50-50)]
NAL 150C	6 [150]	12 15/16 [328]	1/4 [7]	1 11/16 [43]	3 15/16 (+1 31/32-1 31/32) [100 (+50-50)]
NAL 200C	8 [200]	14 7/8 [378]	1/4 [7]	1 11/16 [43]	3 15/16 (+1 31/32-1 31/32) [100 (+50-50)]
NAL 250C	10 [250]	18 13/16 [478]	1/4 [7]	1 11/16 [43]	5 29/32 (+2 61/64-2 61/64) [150 (+75-75)]
NAL 300C	12 [300]	20 13/16 [528]	1/4 [7]	1 11/16 [43]	5 29/32 (+2 61/64-2 61/64) [150 (+75-75)]
NAL 400C	16 [400]	24 3/4 [628]	1/4 [7]	1 11/16 [43]	5 29/32 (+2 61/64-2 61/64) [150 (+75-75)]

Dimensions and movement values are converted from the source schedule. Model identifiers, material grades and traffic categories are unchanged.

Source PDF page 113

NR

SEISMIC EXPANSION JOINT ROOF (FLOOR - FLOOR) 1 - 3 in [25 - 75 mm] Expansion Gap

Surface	Solid Aluminium
Gap width(s)	1 - 3 in [25 - 75 mm]
Height(s)	2 3/16 in [55 mm]
Metal type(s)	Aluminium 6063, T6
Seal Color(s)	Free Seal
Waterproofing	Moisture barrier

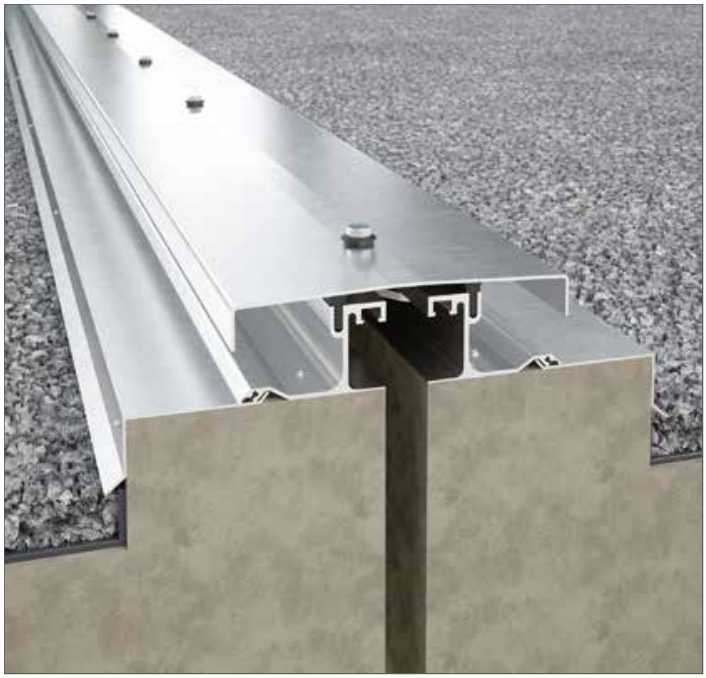

SECTION DETAIL

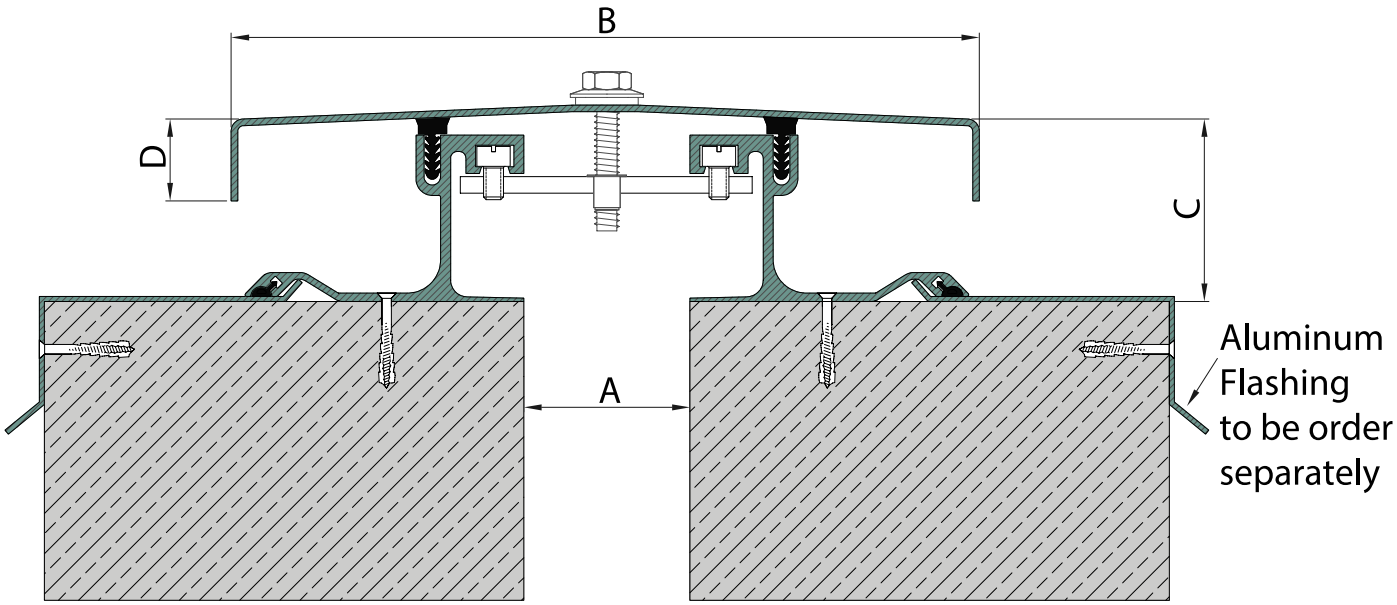

IMPERIAL DIMENSION SCHEDULE

Continued on page 138

Source PDF page 114

NR

FRACTIONAL INCHES / ORIGINAL MILLIMETERS IN BRACKETS

Type	Nominal Joint Width A	Visible Width B	Total Height C	Cover Height D	Total Movement
NR 25	1 [25]	7 7/8 [200]	2 3/16 [55]	1 [25]	1 37/64 (+63/64-19/32) [40 (+25-15)]
NR 35	1 3/8 [35]	8 1/4 [210]	2 3/16 [55]	1 [25]	1 31/32 (+1 3/16-25/32) [50 (+30-20)]
NR 50	2 [50]	8 7/8 [225]	2 3/16 [55]	1 [25]	3 35/64 (+1 31/32-1 37/64) [90 (+50-40)]
NR 75	3 [75]	9 13/16 [250]	2 3/16 [55]	1 [25]	4 17/32 (+1 31/32-2 9/16) [115 (+50-65)]

Dimensions and movement values are converted from the source schedule. Model identifiers, material grades and traffic categories are unchanged.

Source PDF page 114

NR-C

SEISMIC EXPANSION JOINT ROOF (FLOOR - WALL) 1 - 3 in [25 - 75 mm] Expansion Gap

Surface	Solid Aluminium
Gap width(s)	1 - 3 in [25 - 75 mm]
Height(s)	2 3/16 in [55 mm]
Metal type(s)	Aluminium 6063, T6
Seal Color(s)	Free Seal
Waterproofing	Moisture barrier



SECTION DETAIL

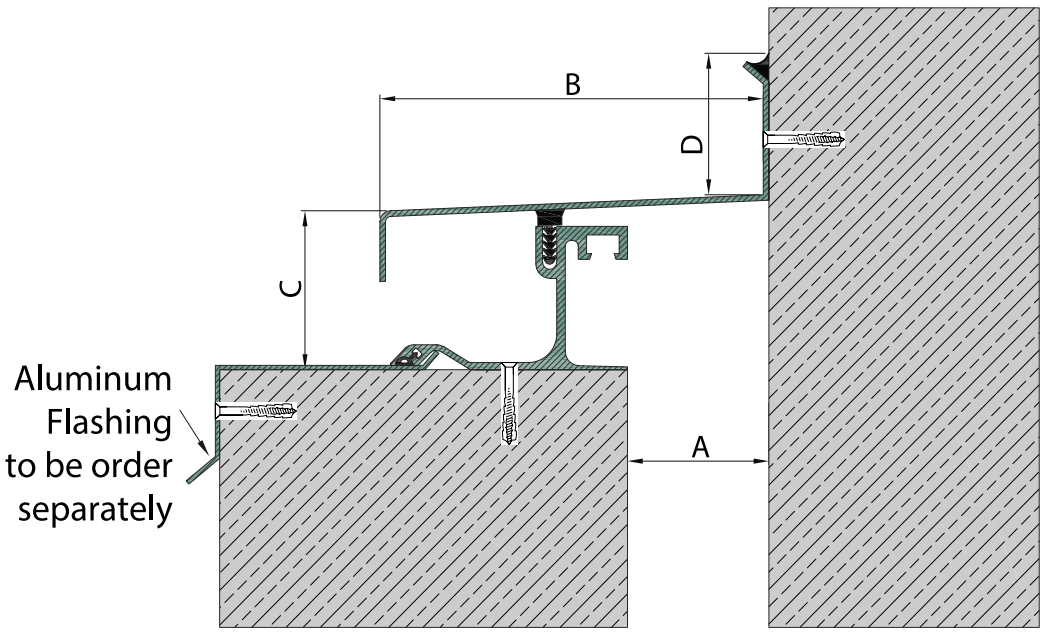

IMPERIAL DIMENSION SCHEDULE

Continued on page 140

Source PDF page 115

NR-C

FRACTIONAL INCHES / ORIGINAL MILLIMETERS IN BRACKETS

Type	Nominal Joint Width A	Central Width B	Total Height C	Visible Height D	Total Movement
NR 25C	1 [25]	4 7/16 [113]	2 3/16 [55]	2 [51]	1 49/64 (+63/64-25/32) [45 (+25-20)]
NR 35C	1 3/8 [35]	4 13/16 [123]	2 3/16 [55]	2 [51]	2 23/64 (+1 3/16-1 3/16) [60 (+30-30)]
NR 50C	2 [50]	5 7/16 [138]	2 3/16 [55]	2 [51]	2 61/64 (+1 3/16-1 49/64) [75 (+30-45)]
NR 75C	3 [75]	6 7/16 [163]	2 3/16 [55]	2 [51]	3 15/16 (+1 3/16-2 3/4) [100 (+30-70)]

Dimensions and movement values are converted from the source schedule. Model identifiers, material grades and traffic categories are unchanged.

Source PDF page 115

NR

SEISMIC EXPANSION JOINT ROOF (FLOOR - FLOOR)
100 - 400 Expansion Gap

Surface	Solid Aluminium
Gap width(s)	4 - 16 in [100 - 400 mm]
Height(s)	mm
Metal type(s)	Aluminium 6063, T6
Seal Color(s)	Free Seal
Waterproofing	Moisture barrier

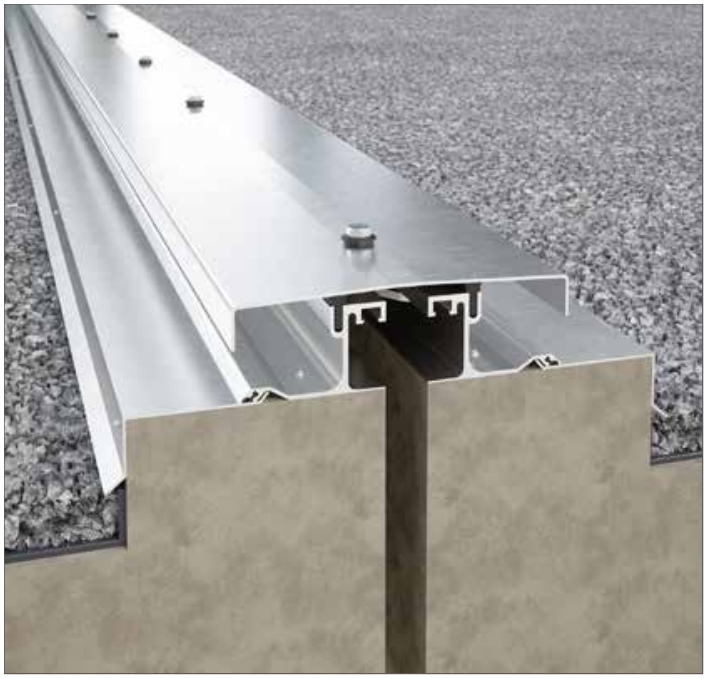

SECTION DETAIL

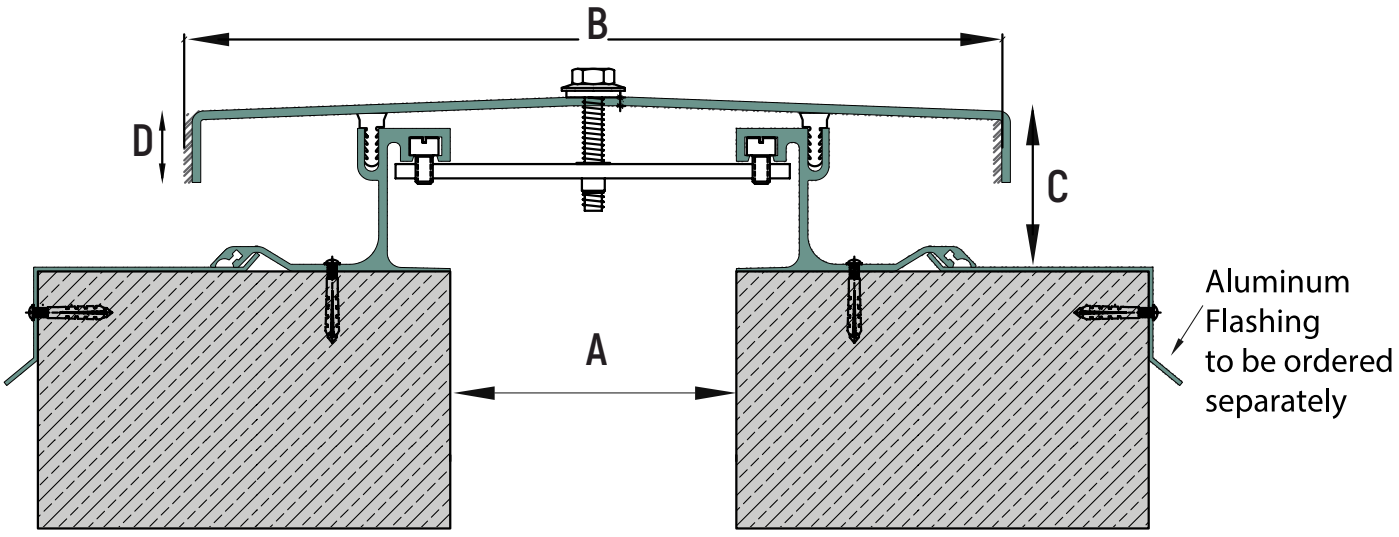

IMPERIAL DIMENSION SCHEDULE

Continued on page 142

Source PDF page 116

NR

FRACTIONAL INCHES / ORIGINAL MILLIMETERS IN BRACKETS

Type	Nominal Joint Width A	Visible Width B	Total Height C	Cover Height D	Total Movement
NR 100	4 [100]	11 1/4 [286]	2 3/8 [60]	1 [25]	6 11/16 (+3 5/32-3 35/64) [170 (+80-90)]
NR 150	6 [150]	13 1/4 [336]	2 3/8 [60]	1 [25]	9 29/64 (+3 15/16-5 33/64) [240 (+100-140)]
NR 200	8 [200]	15 1/4 [387]	2 3/8 [60]	1 [25]	11 13/16 (+4 21/64-7 31/64) [300 (+110-190)]
NR 250	10 [250]	17 1/4 [438]	2 3/8 [60]	1 [25]	13 25/32 (+4 21/64-9 29/64) [350 (+110-240)]
NR 300	12 [300]	21 3/16 [538]	2 3/8 [60]	1 [25]	15 3/4 (+4 21/64-11 27/64) [400 (+110-290)]
NR 400	16 [400]	23 1/4 [590]	2 3/8 [60]	1 [25]	19 11/16 (+4 21/64-15 23/64) [500 (+110-390)]

Dimensions and movement values are converted from the source schedule. Model identifiers, material grades and traffic categories are unchanged.

Source PDF page 116

NR-C

SEISMIC EXPANSION JOINT ROOF (FLOOR - FLOOR)
100 - 400 Expansion Gap

Surface	Solid Aluminium
Gap width(s)	4 - 16 in [100 - 400 mm]
Height(s)	mm
Metal type(s)	Aluminium 6063, T6
Seal Color(s)	Free Seal
Waterproofing	Moisture barrier



SECTION DETAIL

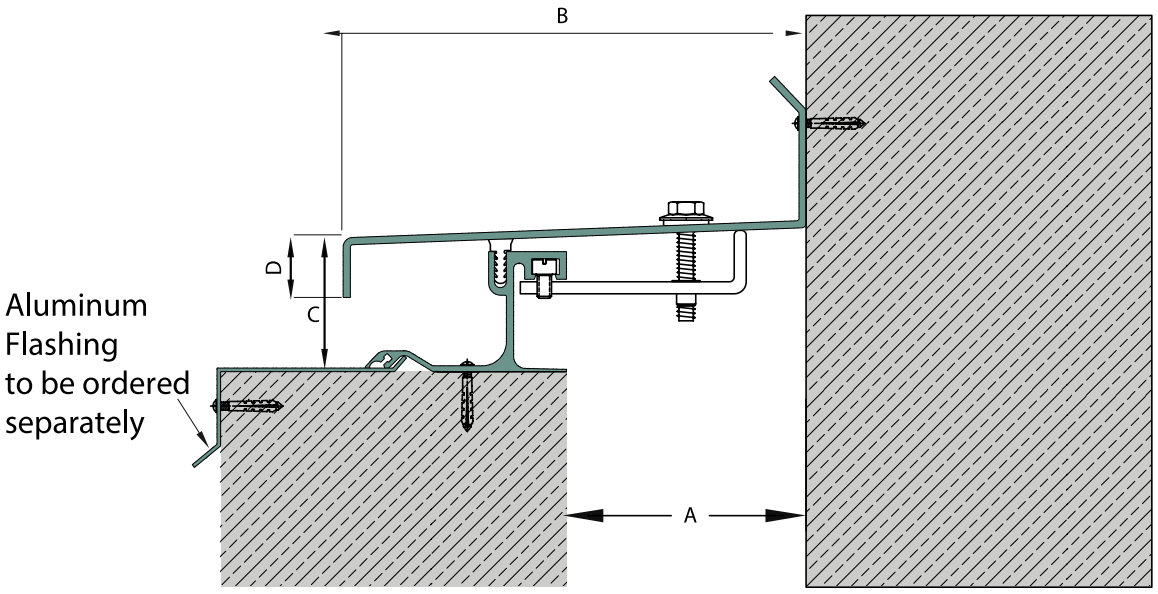

IMPERIAL DIMENSION SCHEDULE

Continued on page 144

Source PDF page 117

NR-C

FRACTIONAL INCHES / ORIGINAL MILLIMETERS IN BRACKETS

Type	Nominal Joint Width A	Visible Width B	Total Height C	Cover Height D	Total Movement
NR 100C	4 [100]	7 5/8 [193]	2 3/8 [60]	1 [25]	5 1/8 (+2 11/64-2 61/64) [130 (+55-75)]
NR 150C	6 [150]	9 9/16 [243]	2 3/8 [60]	1 [25]	7 3/32 (+2 11/64-4 59/64) [180 (+55-125)]
NR 200C	8 [200]	11 9/16 [293]	2 3/8 [60]	1 [25]	9 1/16 (+2 11/64-6 57/64) [230 (+55-175)]
NR 250C	10 [250]	13 9/16 [344]	2 3/8 [60]	1 [25]	11 1/32 (+2 11/64-8 55/64) [280 (+55-225)]
NR 300C	12 [300]	16 1/2 [419]	2 3/8 [60]	1 [25]	12 63/64 (+2 11/64-10 53/64) [330 (+55-275)]
NR 400C	16 [400]	19 1/2 [495]	2 3/8 [60]	1 [25]	16 59/64 (+2 11/64-14 49/64) [430 (+55-375)]

Dimensions and movement values are converted from the source schedule. Model identifiers, material grades and traffic categories are unchanged.

Source PDF page 117

URSJ

SEISMIC EXPANSION JOINT ROOF (FLOOR TO FLOOR)
4 - 16 in [100 - 400 mm] Expansion Joint Width

Surface	Solid Aluminum
Joint width(s)	4 - 16 in [100 - 400 mm]
Height(s)	2 in [51 mm]
Metal type(s)	Aluminium 6063, T6
Seal Color(s)	Black
Waterproofing	Watertight



SECTION DETAIL

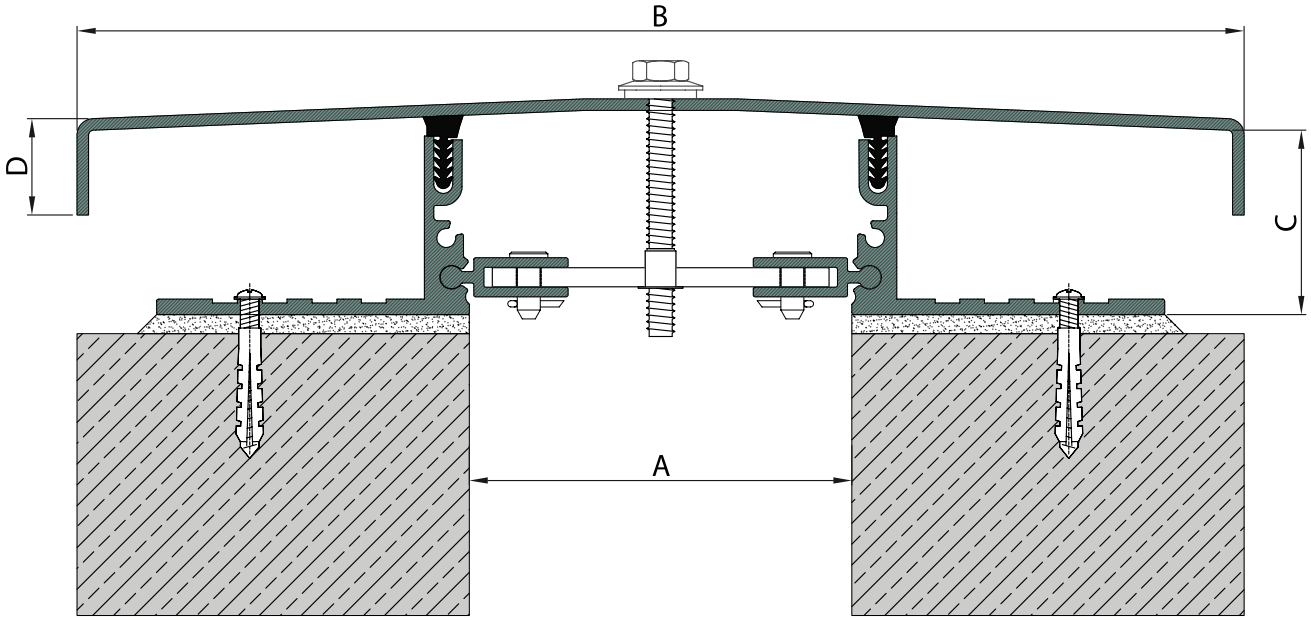

IMPERIAL DIMENSION SCHEDULE

Continued on page 146

Source PDF page 118

URSJ

FRACTIONAL INCHES / ORIGINAL MILLIMETERS IN BRACKETS

Type	Nominal Joint Width A	Total Width B	Installation Height C	Coverage Height D	Thermal Movement	Seismic Movement
URSJ 100	4 [100]	12 [305]	2 [51]	1 [25]	6 19/64 (+4 21/64-1 31/32) [160(+110-50)]	7 9/32 (+4 21/64-2 61/64) [185(+110-75)]
URSJ 150	6 [150]	14 [355]	2 [51]	1 [25]	8 17/64 (+4 21/64-3 15/16) [210(+110-100)]	9 1/4 (+4 21/64-4 59/64) [235(+110-125)]
URSJ 200	8 [200]	15 15/16 [405]	2 [51]	1 [25]	10 15/64 (+4 21/64-5 29/32) [260(+110-150)]	11 7/32 (+4 21/64-6 57/64) [285(+110-175)]
URSJ 250	10 [250]	17 15/16 [455]	2 [51]	1 [25]	12 13/64 (+4 21/64-7 7/8) [310(+110-200)]	13 3/16 (+4 21/64-8 55/64) [335(+110-225)]
URSJ 300	12 [300]	19 7/8 [505]	2 [51]	1 [25]	14 11/64 (+4 21/64-9 27/32) [360(+110-250)]	15 5/32 (+4 21/64-10 53/64) [385(+110-275)]
URSJ 400	16 [400]	23 13/16 [605]	2 [51]	1 [25]	16 9/64 (+4 21/64-11 13/16) [410(+110-300)]	19 3/32 (+4 21/64-14 49/64) [485(+110-375)]

Dimensions and movement values are converted from the source schedule. Model identifiers, material grades and traffic categories are unchanged.

Source PDF page 118

URSJ-C

SEISMIC EXPANSION JOINT ROOF (FLOOR TO WALL) 4 - 16 in [100 - 400 mm] Expansion Joint Width

Surface	Solid Aluminum
Joint width(s)	4 - 16 in [100 - 400 mm]
Height(s)	2 in [51 mm]
Metal type(s)	Aluminium 6063, T6
Seal Color(s)	Black
Waterproofing	Watertight



SECTION DETAIL

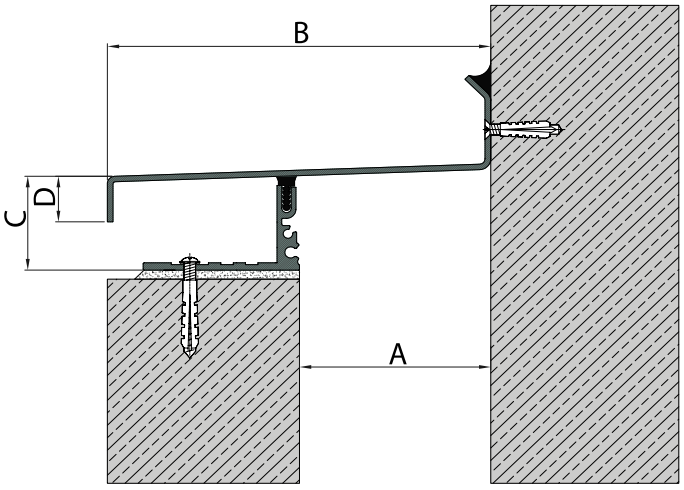

IMPERIAL DIMENSION SCHEDULE

Continued on page 148

URSJ-C

FRACTIONAL INCHES / ORIGINAL MILLIMETERS IN BRACKETS

Type	Nominal Joint Width A	Total Width B	Installation Height C	Coverage Height D	Thermal Movement	Seismic Movement
URSJ 100C	4 [100]	7 7/8 [200]	2 [51]	1 [25]	5 5/16 (+2 23/64-2 61/64) [135(+60-75)]	7 9/32 (+3 11/32-3 15/16) [185(+85-100)]
URSJ 150C	6 [150]	9 13/16 [250]	2 [51]	1 [25]	6 19/64 (+2 23/64-3 15/16) [160(+60-100)]	8 17/64 (+3 11/32-4 59/64) [210(+85-125)]
URSJ 200C	8 [200]	11 13/16 [300]	2 [51]	1 [25]	8 17/64 (+2 23/64-5 29/32) [210(+60-150)]	10 15/64 (+3 11/32-6 57/64) [260(+85-175)]
URSJ 250C	10 [250]	13 3/4 [350]	2 [51]	1 [25]	10 15/64 (+2 23/64-7 7/8) [260(+60-200)]	12 13/64 (+3 11/32-8 55/64) [310(+85-225)]
URSJ 300C	12 [300]	15 3/4 [400]	2 [51]	1 [25]	12 13/64 (+2 23/64-9 27/32) [310(+60-250)]	14 11/64 (+3 11/32-10 53/64) [360(+85-275)]
URSJ 400C	16 [400]	19 11/16 [500]	2 [51]	1 [25]	14 11/64 (+2 23/64-11 13/16) [360(+60-300)]	18 7/64 (+3 11/32-14 49/64) [460(+85-375)]

Dimensions and movement values are converted from the source schedule. Model identifiers, material grades and traffic categories are unchanged.

Source PDF page 119

UPR-25

EXPANSION JOINT FLOOR TO FLOOR 1-1 3/8 in [25-35 mm] Expansion Joint Width

Surface	Extruded Rubber
Joint width(s)	1 - 1 3/8 in [25 - 35 mm]
Height(s)	7/8 in [22 mm]
Rubber type(s)	EPDM
Seal Color(s)	Black
Waterproofing	Watertight



Type	Nominal Joint Width A	Visible Width B	Installation Height C	Total Movement	Load Capacity
UPR 25	1 [25]	5 7/8 [150]	7/8 [22]	25/32 (±25/64) [20(±10)]	Vehicle
UPR 35	1 3/8 [35]	6 5/16 [160]	7/8 [22]	1 3/16 (±19/32) [30(±15)]	Vehicle

SECTION DETAIL

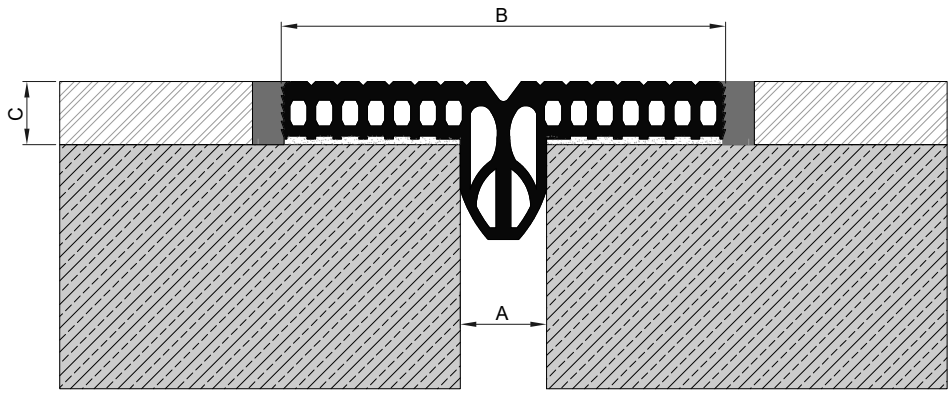

Drawing references correspond to the dimension schedule. Original geometry retained.

Source PDF page 120

UPR-25C

EXPANSION JOINT FLOOR TO WALL 1-1 3/8 in [25-35 mm] Expansion Joint Width

Surface	Extruded Rubber
Joint width(s)	1 - 1 3/8 in [25 - 35 mm]
Height(s)	7/8 in [22 mm]
Rubber type(s)	EPDM
Seal Color(s)	Black
Waterproofing	Watertight



Type	Nominal Joint Width A	Visible Width B	Installation Height C	Total Movement	Load Capacity
UPR 25C	1 [25]	3 3/8 [85]	7/8 [22]	43/64 (+25/64/-9/32) [17(+10/-7)]	Vehicle
UPR 35C	1 3/8 [35]	3 3/4 [95]	7/8 [22]	1 3/16 (±19/32) [30(±15)]	Vehicle

SECTION DETAIL

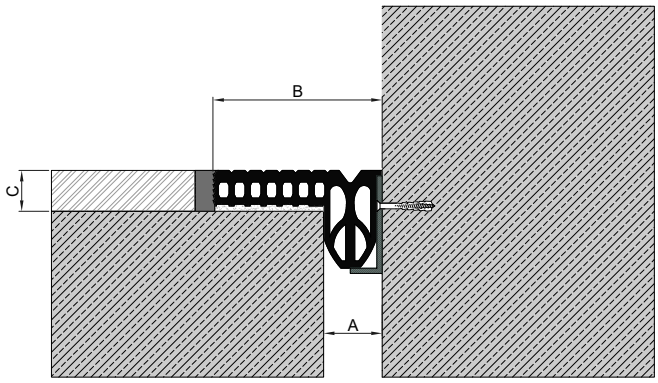

Drawing references correspond to the dimension schedule. Original geometry retained.

Source PDF page 121

UPR-50

EXPANSION JOINT FLOOR TO FLOOR 2 in [50 mm]
Expansion Joint Width

Surface	Extruded Rubber
Joint width(s)	2 in [50 mm]
Height(s)	7/8 in [22 mm]
Rubber type(s)	EPDM
Seal Color(s)	Black
Waterproofing	Watertight



Type	Nominal Joint Width A	Visible Width B	Installation Height C	Total Movement	Load Capacity
UPR 50	2 [50]	8 3/4 [222.5]	7/8 [22]	1 37/64 (±25/32) [40(±20)]	Private Cars

SECTION DETAIL

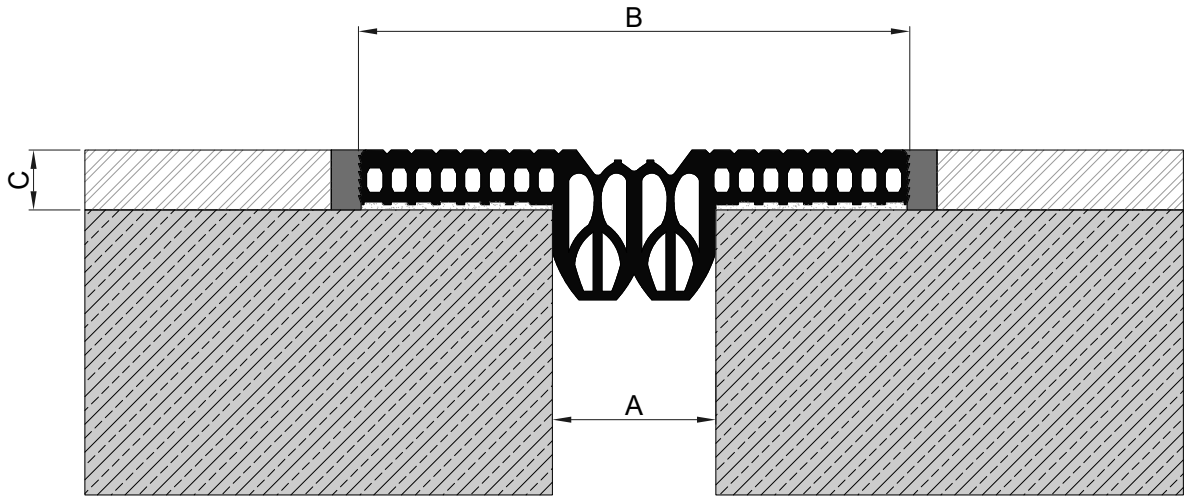

Drawing references correspond to the dimension schedule. Original geometry retained.

Source PDF page 122

UPR-50C

EXPANSION JOINT FLOOR TO WALL 2 in [50 mm]
Expansion Joint Widths

Surface	Extruded Rubber
Joint width(s)	2 in [50 mm]
Height(s)	7/8 in [22 mm]
Rubber type(s)	EPDM
Seal Color(s)	Black
Waterproofing	Watertight



Type	Nominal Joint Width A	Visible Width B	Installation Height C	Total Movement	Load Capacity
UPR 50	2 [50]	4 3/4 [120]	7/8 [23]	1 37/64 (±25/32) [40(±20)]	Private Cars

SECTION DETAIL

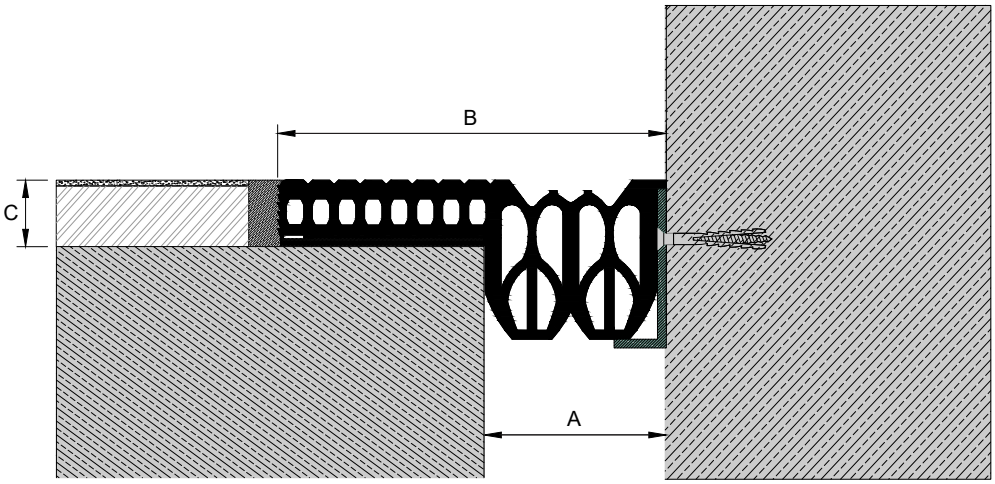

Drawing references correspond to the dimension schedule. Original geometry retained.

Source PDF page 123

UPR-75

EXPANSION JOINT FLOOR TO FLOOR 3 in [75 mm]
Expansion Joint Width

Surface	Extruded Rubber
Joint width(s)	3 in [75 mm]
Height(s)	7/8 in [22 mm]
Rubber type(s)	EPDM
Seal Color(s)	Black
Waterproofing	Watertight



Type	Nominal Joint Width A	Visible Width B	Installation Height C	Total Movement	Load Capacity
UPR 75	3 [75]	8 7/8 [225]	7/8 [22]	2 23/64 (±1 3/16) [60(±30)]	Private Cars

SECTION DETAIL

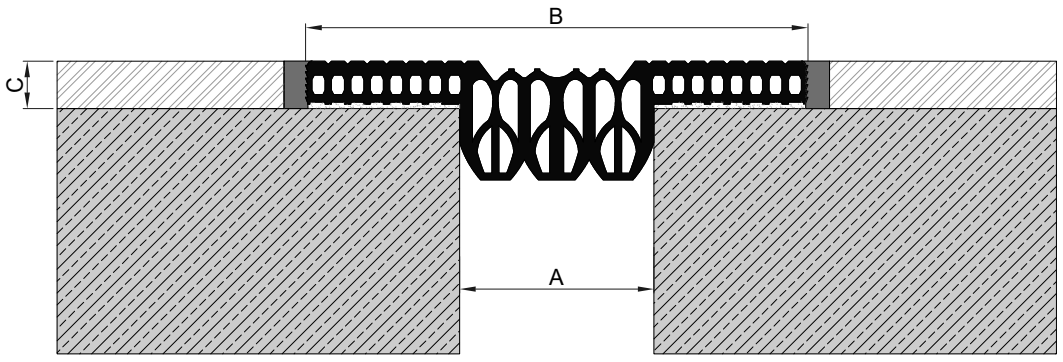

Drawing references correspond to the dimension schedule. Original geometry retained.

Source PDF page 124

UPR-75C

EXPANSION JOINT FLOOR TO WALL 3 in [75 mm]
Expansion Joint Width

Surface	Extruded Rubber
Joint width(s)	3 in [75 mm]
Height(s)	7/8 in [23 mm]
Rubber type(s)	EPDM
Seal Color(s)	Black
Waterproofing	Watertight



Type	Nominal Joint Width A	Visible Width B	Installation Height C	Total Movement	Load Capacity
UPR 75C	3 [75]	5 11/16 [145]	7/8 [23]	2 23/64 (±1 3/16) [60(±30)]	Private Cars

SECTION DETAIL

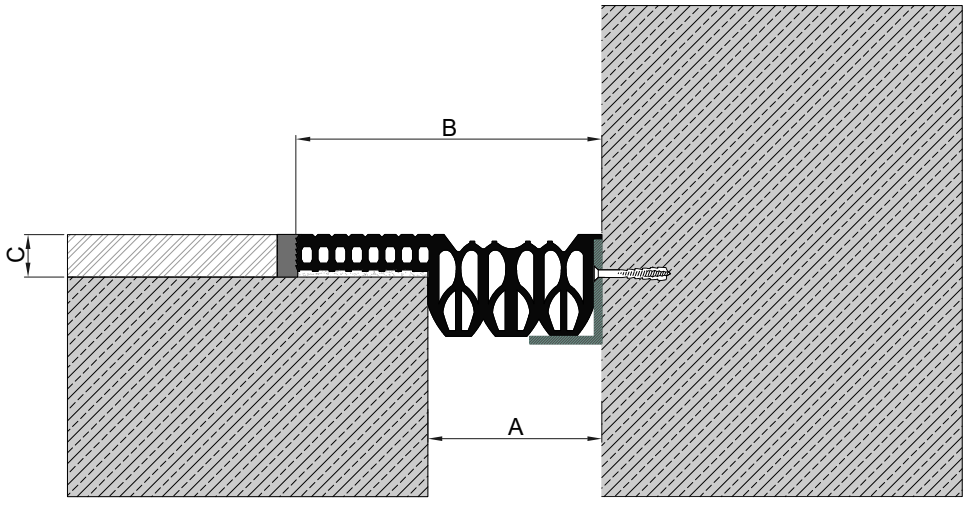

Drawing references correspond to the dimension schedule. Original geometry retained.

Source PDF page 125

UPR-100

EXPANSION JOINT FLOOR TO FLOOR 4 in [100 mm] Expansion Joint Width

Surface	Extruded Rubber
Joint width(s)	4 in [100 mm]
Height(s)	7/8 in [22 mm]
Rubber type(s)	EPDM
Seal Color(s)	Black
Waterproofing	Watertight



Type	Nominal Joint Width A	Visible Width B	Installation Height C	Total Movement	Load Capacity
UPR 100	4 [100]	10 7/8 [276.1]	7/8 [22]	3 5/32 (±1 37/64) [80(±40)]	Private Cars

SECTION DETAIL

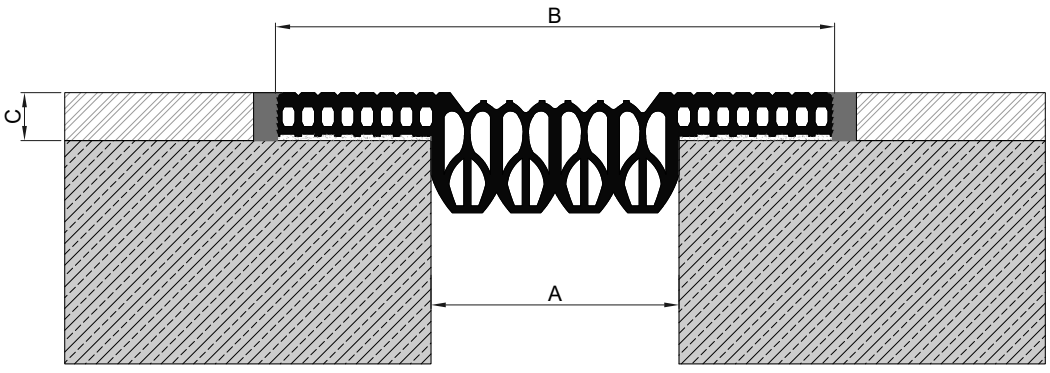

Drawing references correspond to the dimension schedule. Original geometry retained.

Source PDF page 126

UPR-100C

EXPANSION JOINT FLOOR TO WALL 4 in [100 mm]
Expansion Joint Width

Surface	Extruded Rubber
Joint width(s)	4 in [100 mm]
Height(s)	7/8 in [22 mm]
Rubber type(s)	EPDM
Seal Color(s)	Black
Waterproofing	Watertight



Type	Nominal Joint Width A	Visible Width B	Installation Height C	Total Movement	Load Capacity
UPR 100C	4 [100]	6 11/16 [170]	7/8 [23]	3 5/32 (±1 37/64) [80(±40)]	Private Cars

SECTION DETAIL

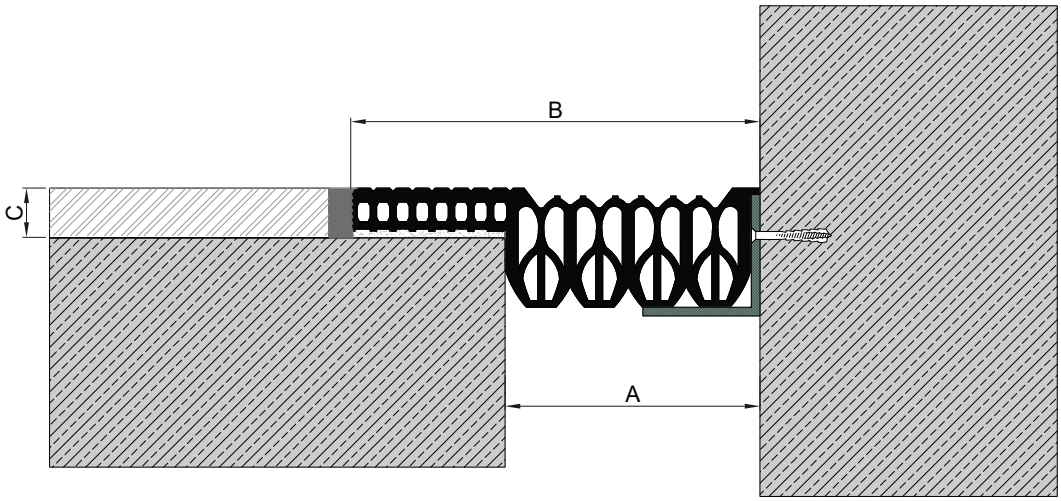

Drawing references correspond to the dimension schedule. Original geometry retained.

Source PDF page 127

NPR 12.5

EXPANSION JOINT FOR FLOORS AND WALLS 3/8 - 9/16 in [10 - 15 mm] Expansion Gap

Surface	Rubber Seal
Gap width(s)	3/8 - 9/16 in [10 - 15 mm]
Height(s)	11/16 in [17 mm]
Seal Color(s)	Black



Type	Nominal Joint Width A	Installation Depth B	Total Movement	Load Capacity
NPR 12.5	3/8 - 9/16 [10 - 15]	11/16 [17]	25/64 (+13/64-13/64) [10 (+5-5)]	Private Cars

SECTION DETAIL

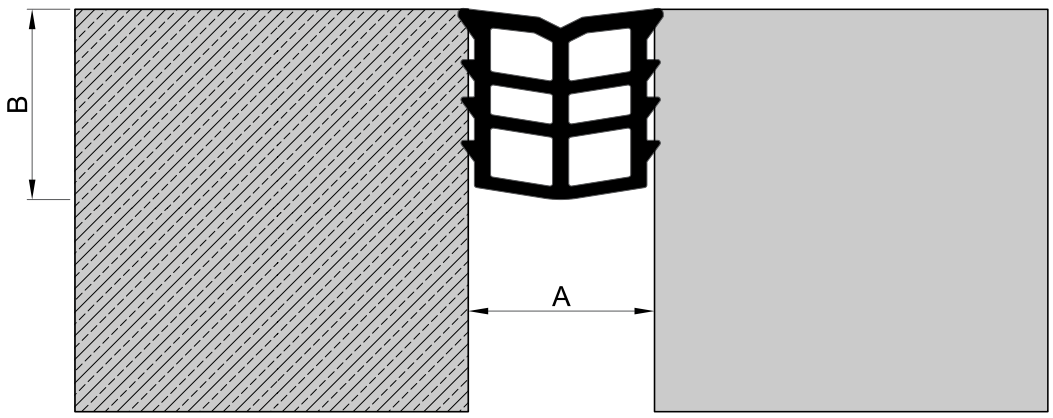

Drawing references correspond to the dimension schedule. Original geometry retained.

Source PDF page 128

NPR

EXPANSION JOINT FLOOR TO FLOOR; FLOOR TO WALL 13/16 - 3 in [20 - 75 mm] Expansion Gap

Surface	Rubber Seal
Gap width(s)	13/16 - 3 in [20 - 75 mm]
Height(s)	2 1/2 in [64 mm]
Seal Color(s)	Black



SECTION DETAIL

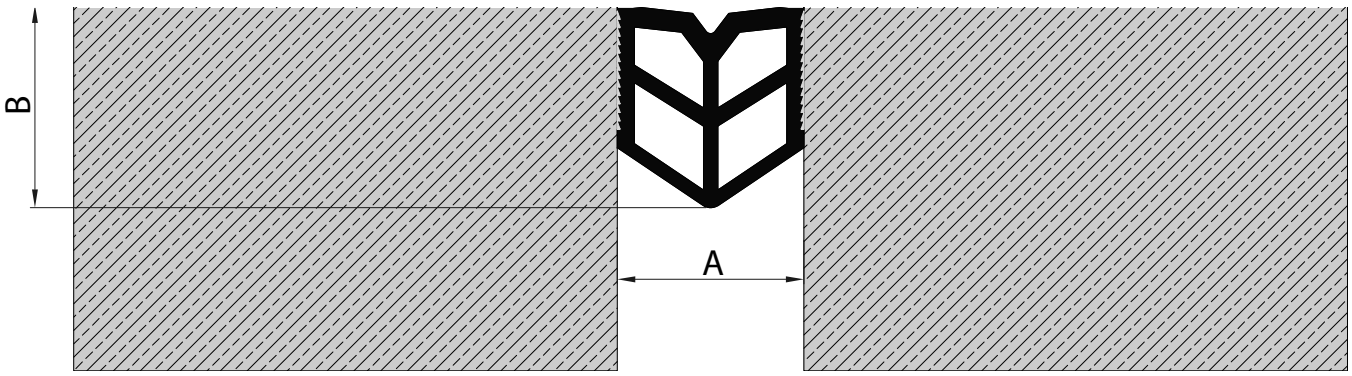

IMPERIAL DIMENSION SCHEDULE

Continued on page 159

NPR

FRACTIONAL INCHES / ORIGINAL MILLIMETERS IN BRACKETS

Type	Gap Width A	Installation Depth B	Total Movement	Load Capacity
NPR 20	13/16 [20]	1 15/16 [50]	19/32 (19/64-19/64) [15 (7.5-7.5)]	Private Cars
NPR 25	1 [25]	2 1/2 [64]	25/32 (+25/64-25/64) [20 (+10-10)]	Private Cars
NPR 35	1 3/8 [35]	2 1/2 [64]	1 3/16 (+19/32-19/32) [30 (+15-15)]	Private Cars
NPR 50	1 15/16 [50]	2 1/2 [64]	1 37/64 (+25/32-25/32) [40 (+20-20)]	Private Cars
NPR 75	2 15/16 [75]	2 1/2 [64]	1 31/32 (+63/64-63/64) [50 (+25-25)]	Private Cars

Dimensions and movement values are converted from the source schedule. Model identifiers, material grades and traffic categories are unchanged.

Source PDF page 129

NPR 100

EXPANSION JOINT FLOOR TO FLOOR; FLOOR TO WALL 4 in [100 mm] Expansion Gap

Surface	Rubber Seal
Gap width(s)	4 in [100 mm]
Height(s)	2 1/2 in [64 mm]
Seal Color(s)	Black
Waterproofing	Water tight

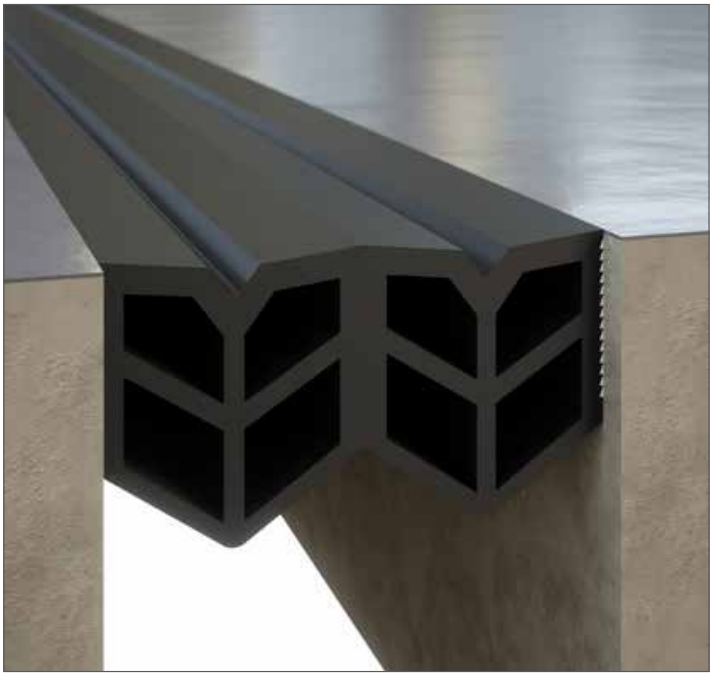

Type	Nominal Joint Width A	Installation Depth B	Total Movement	Load Capacity
NPR 100	4 [100]	2 1/2 [64]	3 5/32 (+1 37/64-1 37/64) [80 (+40-40)]	Vehicle

SECTION DETAIL

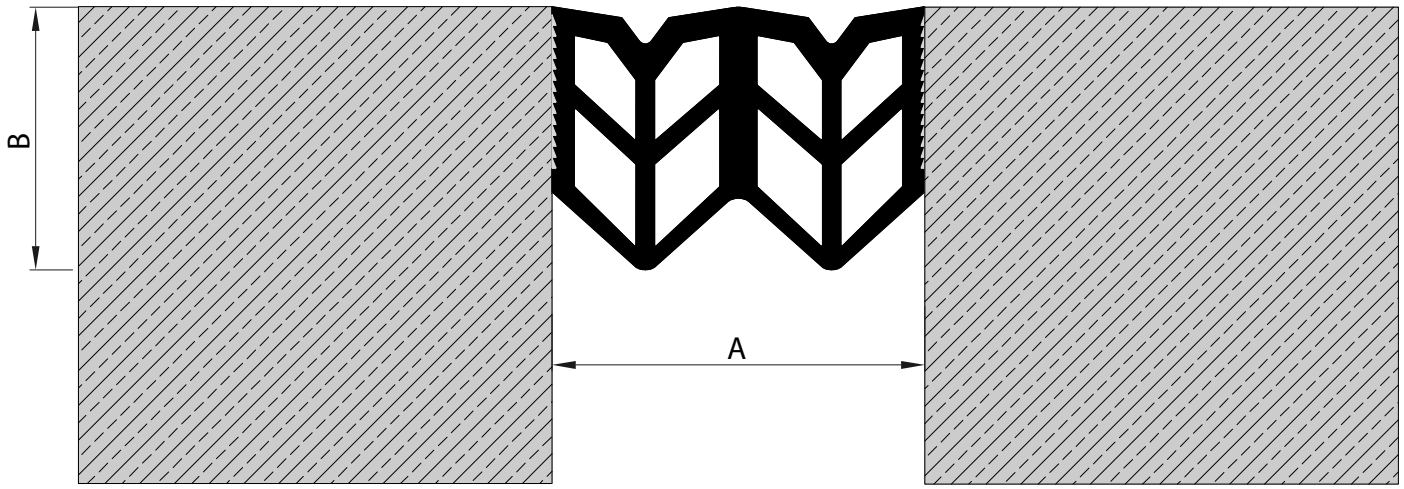

Drawing references correspond to the dimension schedule. Original geometry retained.

Source PDF page 130

NPR

EXPANSION JOINT FLOOR TO FLOOR; FLOOR TO WALL - WATER BARRIER 4 3/4 - 8 7/8 in [120 - 225 mm] Expansion Gap

Surface	Rubber Seal
Gap width(s)	4 3/4-10 in [120-250 mm]
Height(s)	2 1/2 in [64 mm]
Seal Color(s)	Black
Waterproofing	Water tight

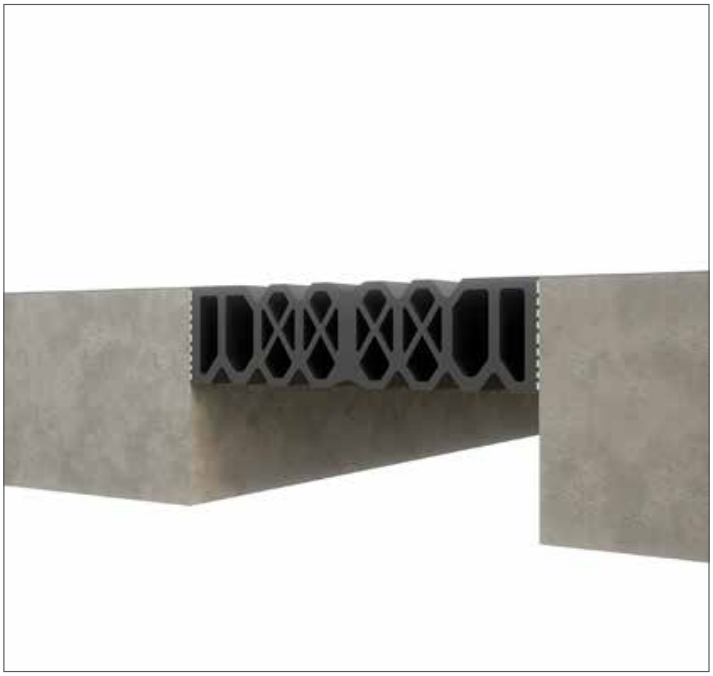

SECTION DETAIL

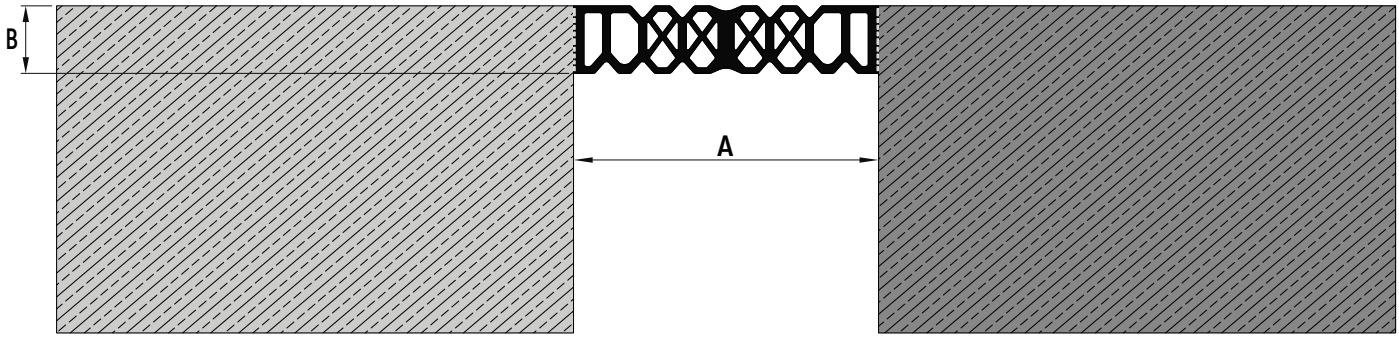

IMPERIAL DIMENSION SCHEDULE

Continued on page 162

NPR

FRACTIONAL INCHES / ORIGINAL MILLIMETERS IN BRACKETS

Type	Nominal Joint Width A	Installation Depth B	Total Movement
NPR 120	4 3/4 [120]	2 1/16 [52]	3 5/16 (+1 21/32-1 21/32) [84 (+42-42)]
NPR 125	5 [125]	2 1/16 [52]	3 35/64 (+1 49/64-1 49/64) [90 (+45-45)]
NPR 150	6 [150]	1 15/16 [50]	3 15/16 (+1 31/32-1 31/32) [100 (+50-50)]
NPR 175	6 7/8 [175]	1 15/16 [50]	4 21/64 (+1 31/32-2 23/64) [110 (+50-60)]
NPR 200	8 [200]	1 15/16 [50]	4 59/64 (+1 31/32-2 61/64) [125 (+50-75)]
NPR 225	8 7/8 [225]	1 15/16 [50]	5 5/16 (+1 31/32-3 11/32) [135 (+50-85)]
NPR 250	10 [250]	2 3/16 [55]	5 29/32 (+1 31/32-3 15/16) [150 (+50-100)]

Dimensions and movement values are converted from the source schedule. Model identifiers, material grades and traffic categories are unchanged.

Source PDF page 131

NPP

EXPANSION JOINT FLOOR TO FLOOR 4 - 10 in [100 - 250 mm] Expansion Joint Width

Surface	Aluminium Strips Rubber Insert
Joint width(s)	4 - 10 in [100 - 250 mm]
Height(s)	1 1/8 in [28 mm]
Seal Color(s)	Black



SECTION DETAIL

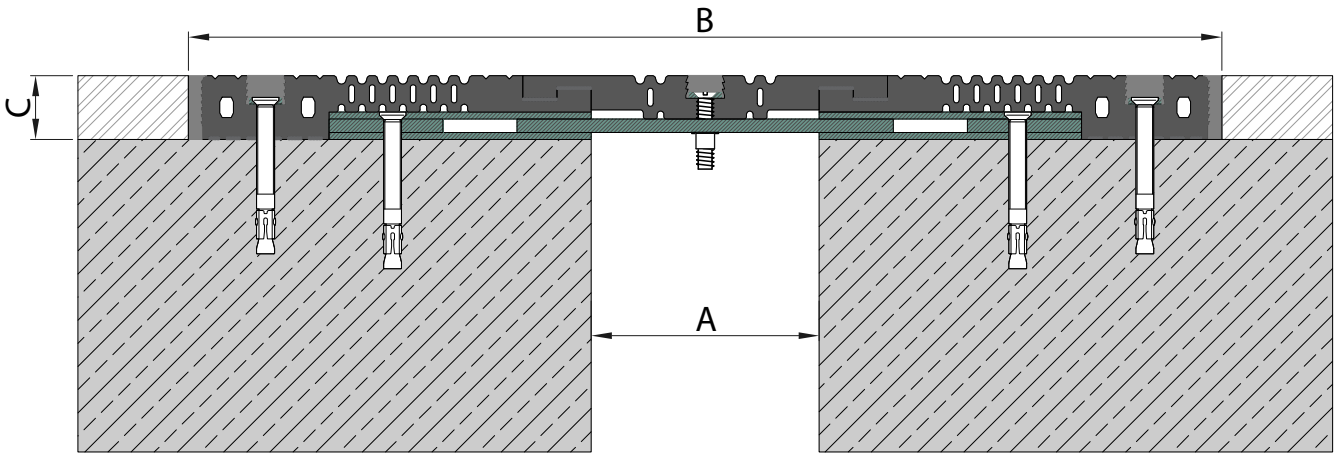

IMPERIAL DIMENSION SCHEDULE

Continued on page 164

NPP

FRACTIONAL INCHES / ORIGINAL MILLIMETERS IN BRACKETS

Type	Nominal Joint Width A	Visible Width B	Installation Height C	Total Movement	Load Capacity
NPP 100	4 [100]	17 13/16 [453]	1 1/8 [28]	4 59/64 (+2 23/64-2 9/16) [125 (+60-65)]	Private Cars
NPP 150	6 [150]	19 13/16 [503]	1 1/8 [28]	4 59/64 (+2 23/64-2 9/16) [125 (+60-65)]	Private Cars
NPP 200	8 [200]	21 3/4 [553]	1 1/8 [28]	4 59/64 (+2 23/64-2 9/16) [125 (+60-65)]	Private Cars
NPP 250	10 [250]	23 3/4 [603]	1 1/8 [28]	4 59/64 (+2 23/64-2 9/16) [125 (+60-65)]	Private Cars

Dimensions and movement values are converted from the source schedule. Model identifiers, material grades and traffic categories are unchanged.

Source PDF page 132

NPP-C

EXPANSION JOINT FLOOR TO WALL 4 - 10 in [100 - 250 mm] Expansion Joint Width

Surface	Aluminium Strips Rubber Insert
Joint width(s)	4 - 10 in [100 - 250 mm]
Height(s)	1 1/8 in [28 mm]
Seal Color(s)	Black

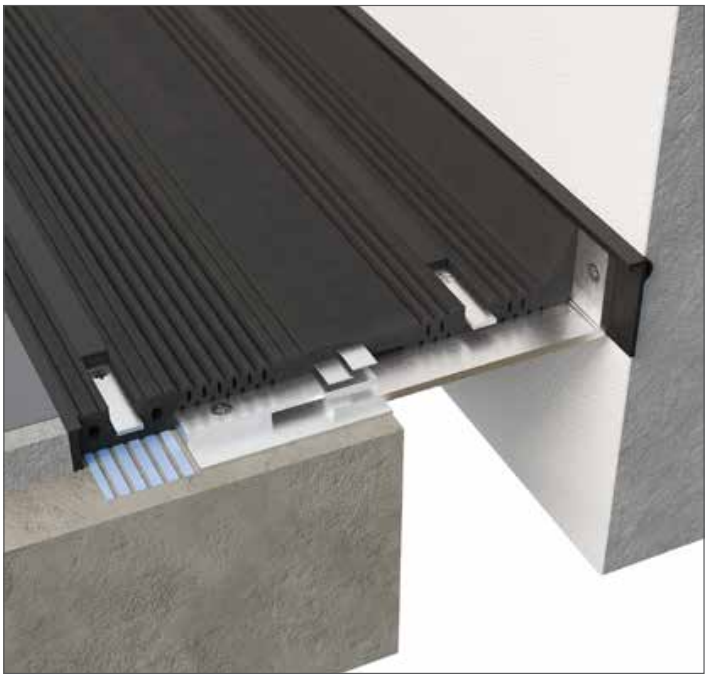

SECTION DETAIL

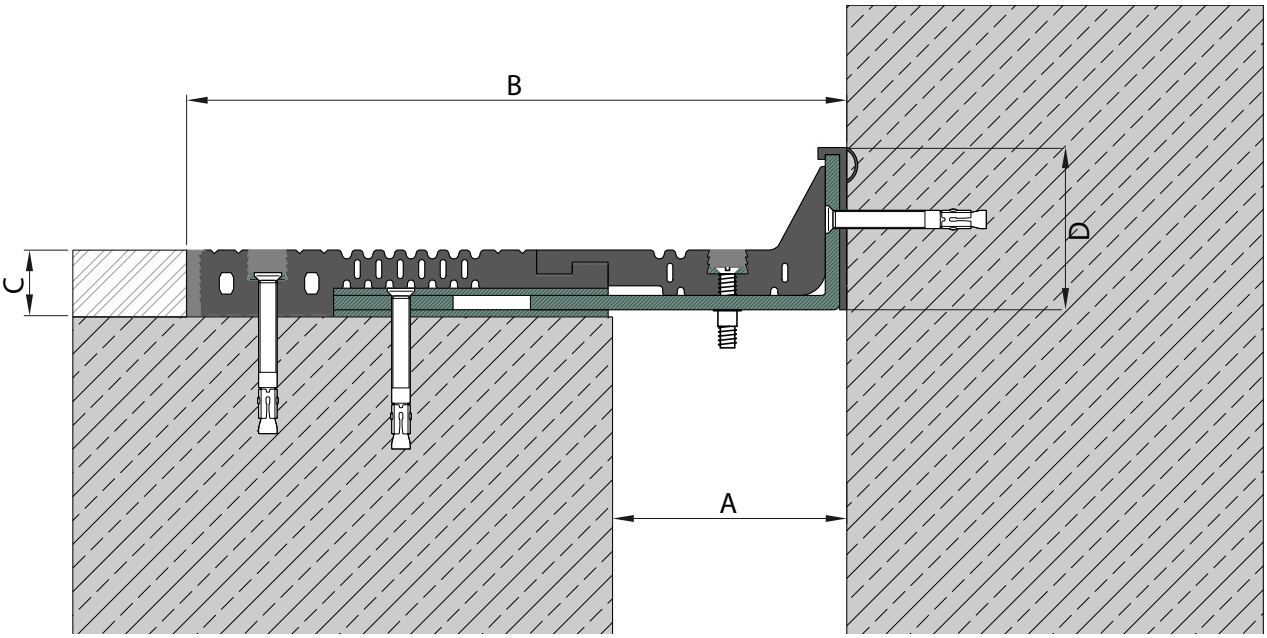

IMPERIAL DIMENSION SCHEDULE

Continued on page 166

Source PDF page 133

NPP-C

FRACTIONAL INCHES / ORIGINAL MILLIMETERS IN BRACKETS

Type	Nominal Joint Width A	Visible Width B	Installation Height C	Visible Height D	Total Movement	Load Capacity
NPP 100C	4 [100]	10 15/16 [278]	1 1/8 [28]	2 11/16 [68]	4 59/64 (+2 23/64-2 9/16) [125 (+60-65)]	Private Cars
NPP 150C	6 [150]	12 7/8 [327]	1 1/8 [28]	2 11/16 [68]	4 59/64 (+2 23/64-2 9/16) [125 (+60-65)]	Private Cars
NPP 200C	8 [200]	14 13/16 [377]	1 1/8 [28]	2 11/16 [68]	4 59/64 (+2 23/64-2 9/16) [125 (+60-65)]	Private Cars
NPP 250C	10 [250]	16 13/16 [427]	1 1/8 [28]	2 11/16 [68]	4 59/64 (+2 23/64-2 9/16) [125 (+60-65)]	Private Cars

Dimensions and movement values are converted from the source schedule. Model identifiers, material grades and traffic categories are unchanged.

Source PDF page 133

NPPH

EXPANSION JOINT FLOOR TO FLOOR 4 - 10 in [100 - 250 mm] Expansion Joint Width

Surface	Aluminium Strips Rubber Insert
Joint width(s)	4 - 10 in [100 - 250 mm]
Height(s)	1 1/8 in [28 mm]
Seal Color(s)	Black



SECTION DETAIL

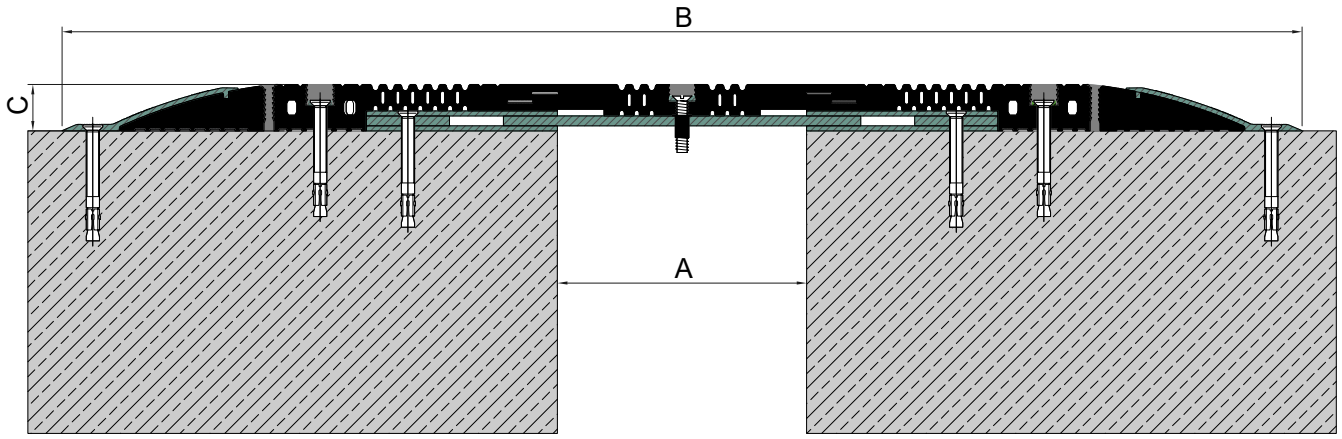

IMPERIAL DIMENSION SCHEDULE

Continued on page 168

NPPH

FRACTIONAL INCHES / ORIGINAL MILLIMETERS IN BRACKETS

Type	Nominal Joint Width A	Visible Width B	Installation Height C	Total Movement	Load Capacity
NPPH 100	4 [100]	27 7/16 [697]	1 1/8 [28]	4 59/64 (+2 23/64-2 9/16) [125 (+60-65)]	Private Cars
NPPH 150	6 [150]	29 7/16 [747]	1 1/8 [28]	4 59/64 (+2 23/64-2 9/16) [125 (+60-65)]	Private Cars
NPPH 200	8 [200]	31 3/8 [797]	1 1/8 [28]	4 59/64 (+2 23/64-2 9/16) [125 (+60-65)]	Private Cars
NPPH 250	10 [250]	33 3/8 [847]	1 1/8 [28]	4 59/64 (+2 23/64-2 9/16) [125 (+60-65)]	Private Cars

Dimensions and movement values are converted from the source schedule. Model identifiers, material grades and traffic categories are unchanged.

Source PDF page 134

NPPH-C

EXPANSION JOINT FLOOR TO WALL 4 - 10 in [100 - 250 mm] Expansion Joint Width

Surface	Aluminium Strips Rubber Insert
Joint width(s)	4 - 10 in [100 - 250 mm]
Height(s)	1 1/8 in [28 mm]
Seal Color(s)	Black

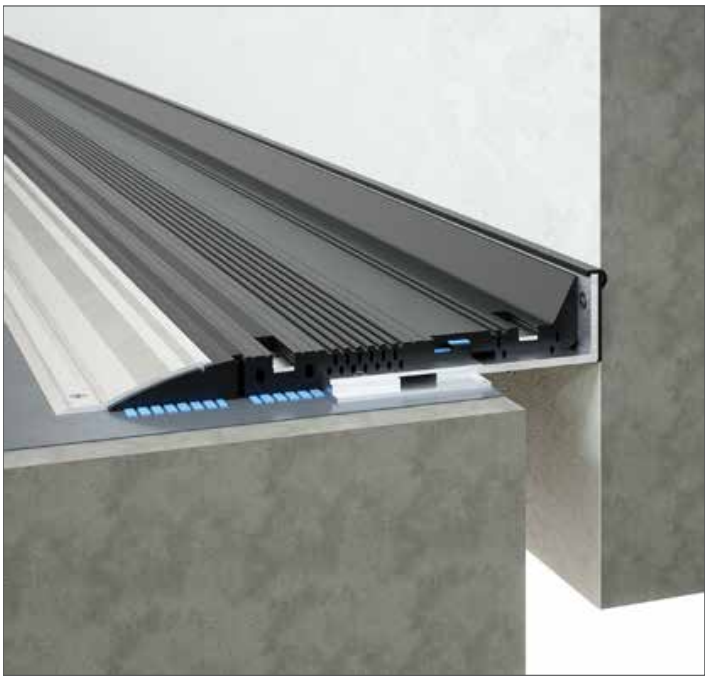

SECTION DETAIL

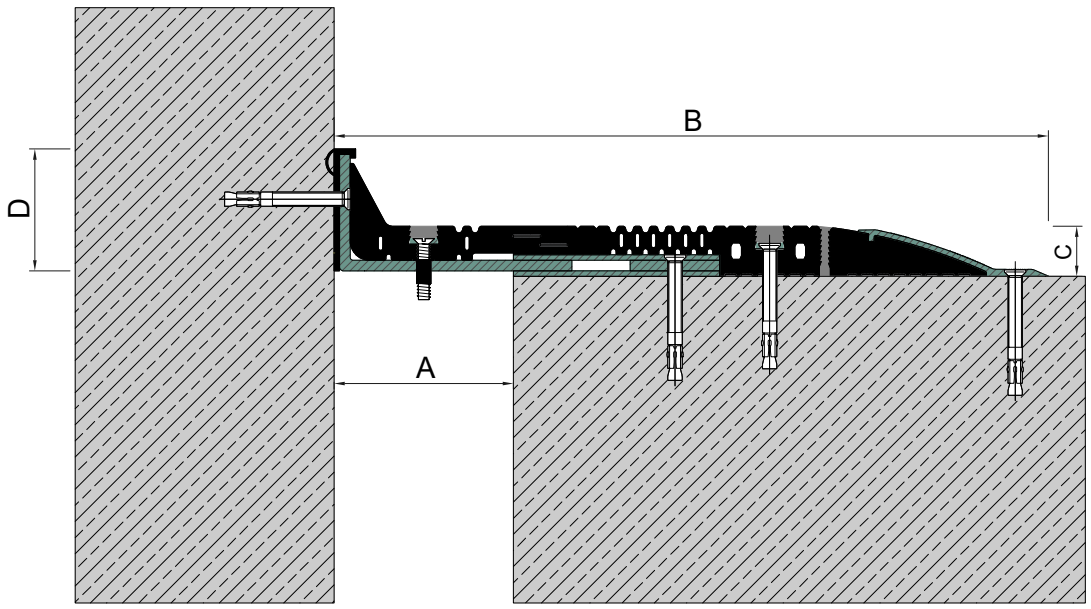

IMPERIAL DIMENSION SCHEDULE

Continued on page 170

NPPH-C

FRACTIONAL INCHES / ORIGINAL MILLIMETERS IN BRACKETS

Type	Nominal Joint Width A	Visible Width B	Installation Height C	Total Height D	Total Movement	Load Capacity
NPPH 100C	4 [100]	15 3/4 [400]	1 1/8 [28]	2 11/16 [68]	2 7/16 (+1 3/16-1 17/64) [62 (+30-32)]	Private Cars
NPPH 150C	6 [150]	17 11/16 [450]	1 1/8 [28]	2 11/16 [68]	2 7/16 (+1 3/16-1 17/64) [62 (+30-32)]	Private Cars
NPPH 200C	8 [200]	19 11/16 [500]	1 1/8 [28]	2 11/16 [68]	2 7/16 (+1 3/16-1 17/64) [62 (+30-32)]	Private Cars
NPPH 250C	10 [250]	21 5/8 [550]	1 1/8 [28]	2 11/16 [68]	2 7/16 (+1 3/16-1 17/64) [62 (+30-32)]	Private Cars

Dimensions and movement values are converted from the source schedule. Model identifiers, material grades and traffic categories are unchanged.

Source PDF page 135

UWTP

Waterproof membrane system for floor and roof expansion joints.

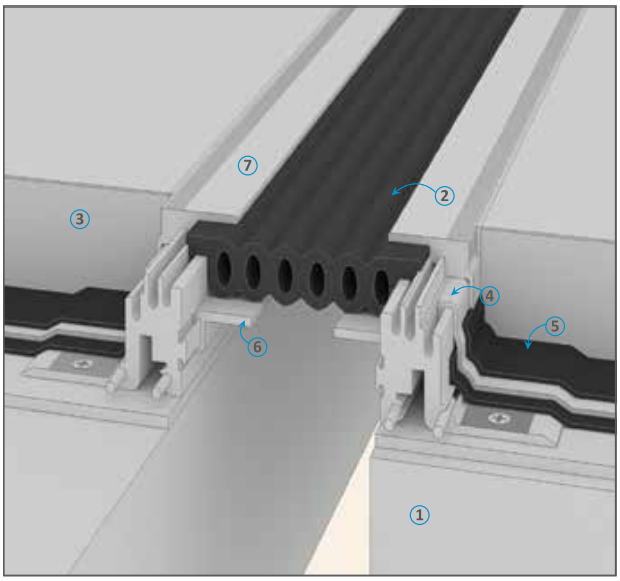







SYSTEM OPTIONS

Joint range

12 - 2 in [300 - 50 mm], nominal

Height range

2 9/16 - 2 3/16 in [65 - 55 mm]

Metal

Aluminum 6063, T6

Seal color

Black

Waterproofing

Watertight

The source lists factory-preassembled transitions, an EPDM gasket and rubber inlay, bonded membrane layers, aluminum support and aluminum capping for secure fixing.

Range direction is retained as printed in the source. See the individual UWTP schedules for each model.

Original manufacturer arrangement details. Model identifiers and embedded drawing annotations are retained.

Source PDF page 136

UWTP INTERSECTION

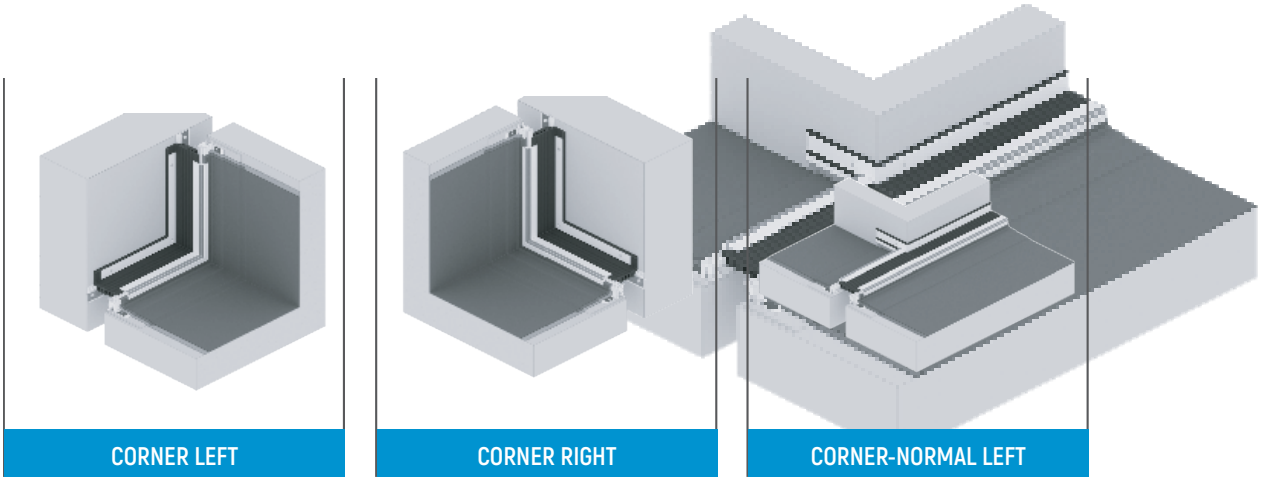
CORNER LEFT

CORNER RIGHT

CORNER-NORMAL LEFT

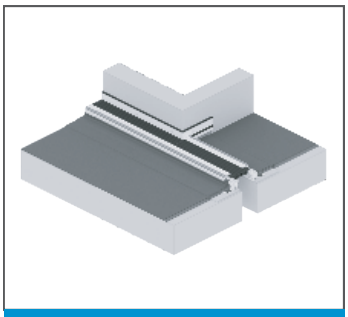
CORNER-NORMAL RIGHT

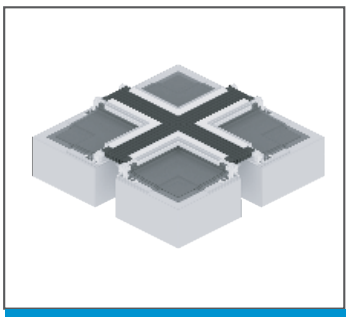
CROSS

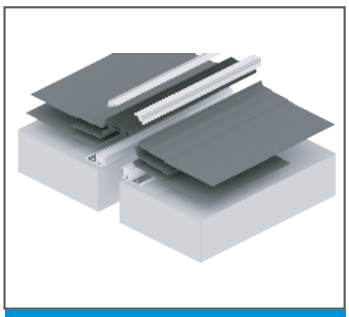
ELEMENTS

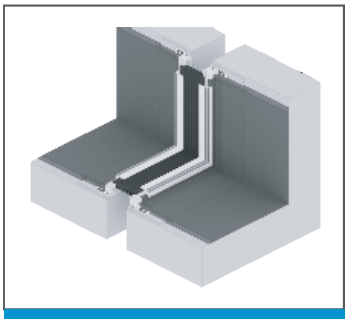
FLOOR END

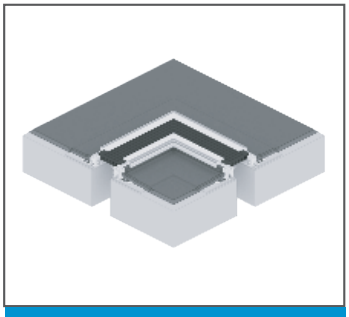
L SHAPE

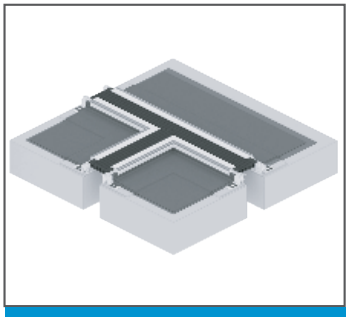
T SHAPE

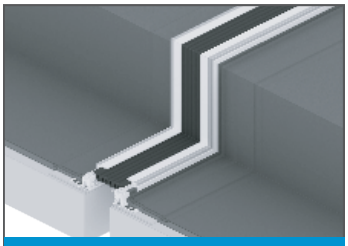
Z SHAPE

Original manufacturer arrangement details. Model identifiers and embedded drawing annotations are retained.

Source PDF page 137

UWTP 50

WATER PROOF EXPANSION JOINT FLOOR TO FLOOR 2 in [50 mm] Expansion Joint Width



Type	Nominal Joint Width A	Visible Width B	Installation Width C	Installation Height D	Total Movement	Load Capacity
UWTP 50	2 [50]	4 3/4 [120]	8 7/8 [225]	2 3/16 [55]	1 31/32 (+63/64-63/64) [50 (+25-25)]	Vehicle

SECTION DETAIL

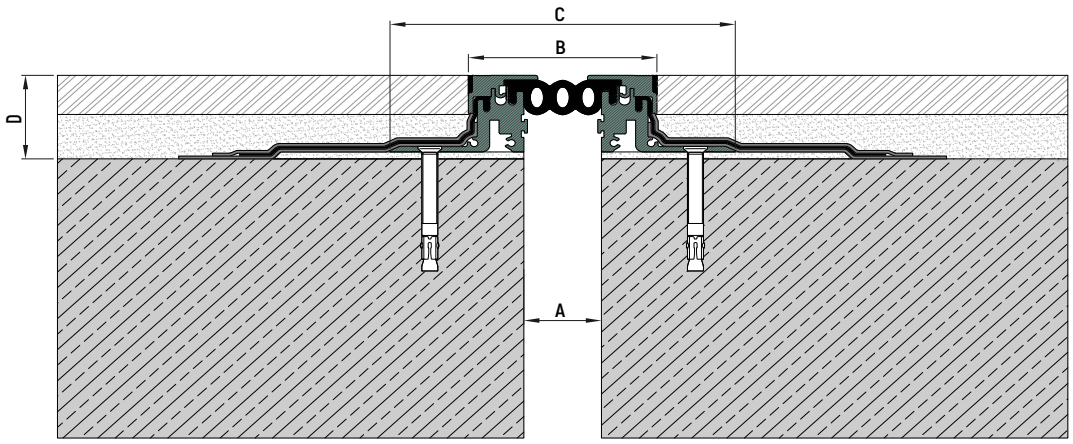

Drawing references correspond to the dimension schedule. Original geometry retained.

Source PDF page 138

UWTP 85

WATER PROOF EXPANSION JOINT FLOOR TO FLOOR 3 3/8 in [85 mm] Expansion Joint Width



Type	Nominal Joint Width A	Visible Width B	Installation Width C	Installation Height D	Total Movement	Load Capacity
UWTP 85	3 3/8 [85]	6 1/8 [155]	10 1/4 [260]	2 3/16 [55]	2 23/64 (+1 3/8-63/64) [60 (+35-25)]	Vehicle

SECTION DETAIL

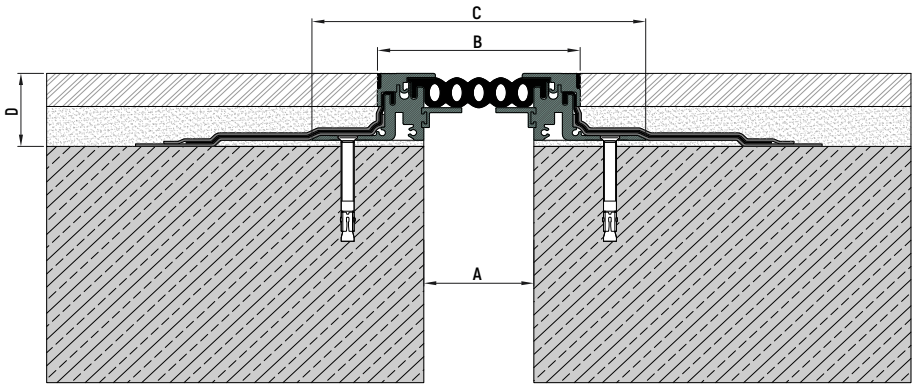

Drawing references correspond to the dimension schedule. Original geometry retained.

Source PDF page 139

UWTP 100-150

WATER PROOF EXPANSION JOINT FLOOR TO FLOOR
4 - 6 in [100 - 150 mm] Expansion Joint Width



Type	Nominal Joint Width A	Visible Width B	Installation Width C	Installation Height D	Total Movement	Load Capacity
UWTP 100	4 [100]	6 11/16 [170]	10 13/16 [275]	2 3/16 [55]	3 11/32 (+1 49/64-1 37/64) [85 (+45-40)]	Vehicle
UWTP 150	6 [150]	8 11/16 [220]	12 13/16 [325]	2 3/16 [55]	3 15/16 (+1 31/32-1 31/32) [100 (+50-50)]	Vehicle

SECTION DETAIL

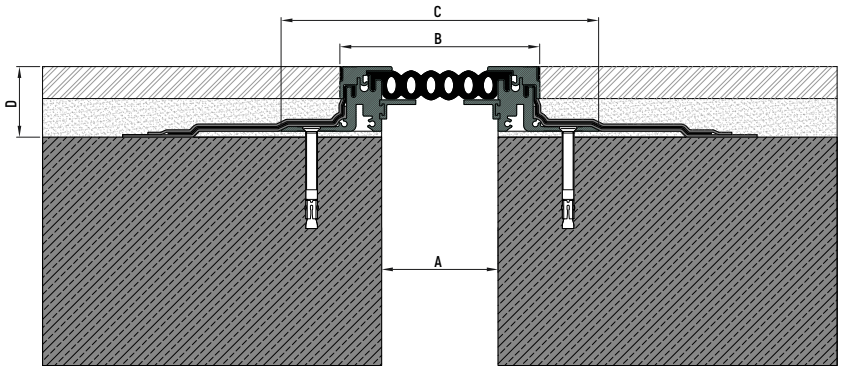

Drawing references correspond to the dimension schedule. Original geometry retained.

Source PDF page 140

UWTP 200-250

WATER PROOF EXPANSION JOINT FLOOR TO FLOOR 8 - 10 in [200 - 250 mm] Expansion Joint Width



Type	Nominal Joint Width A	Visible Width B	Installation Width C	Installation Height D	Total Movement	Load Capacity
UWTP 200	8 [200]	8 11/16 [220]	20 1/2 [520]	2 9/16 [65]	3 15/16 (+1 31/32-1 31/32) [100 (+50-50)]	Vehicle
UWTP 250	10 [250]	8 11/16 [220]	20 1/2 [520]	2 9/16 [65]	3 15/16 (+1 31/32-1 31/32) [100 (+50-50)]	Vehicle

SECTION DETAIL

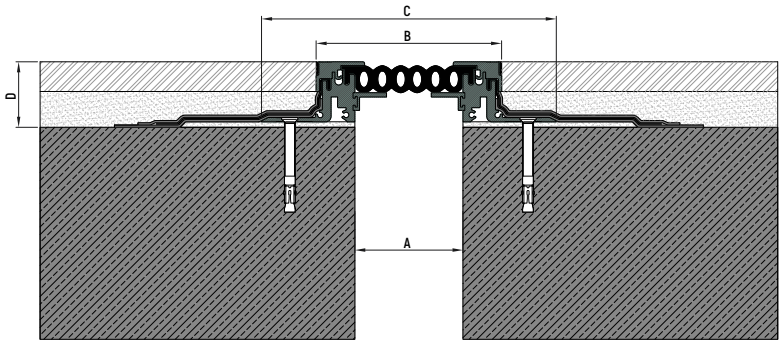

Drawing references correspond to the dimension schedule. Original geometry retained.

Source PDF page 141

UWTP 300

WATER PROOF EXPANSION JOINT FLOOR TO FLOOR
12 in [300 mm] Expansion Joint Width

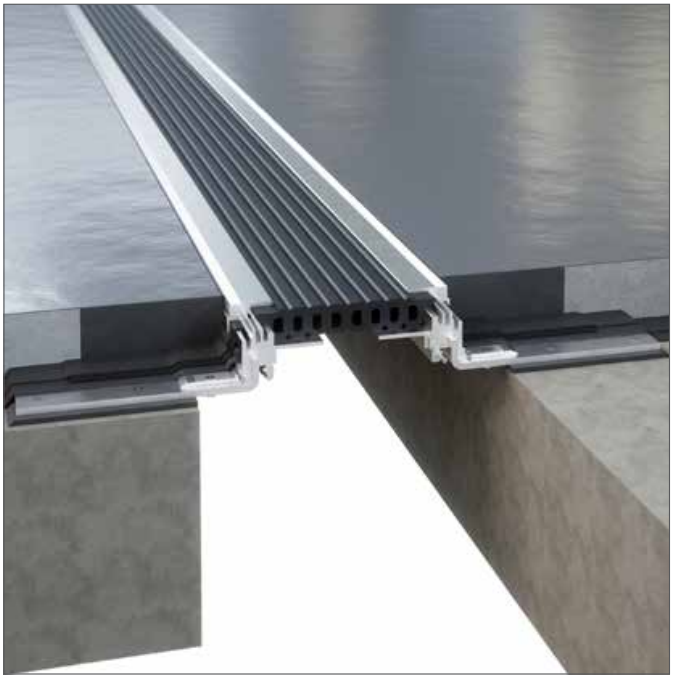

Type	Nominal Joint Width A	Visible Width B	Installation Width C	Installation Height D	Total Movement	Load Capacity
UWTP 300	12 [300]	8 11/16 [220]	24 7/16 [620]	2 9/16 [65]	3 15/16 (+1 31/32-1 31/32) [100 (+50-50)]	Vehicle

SECTION DETAIL

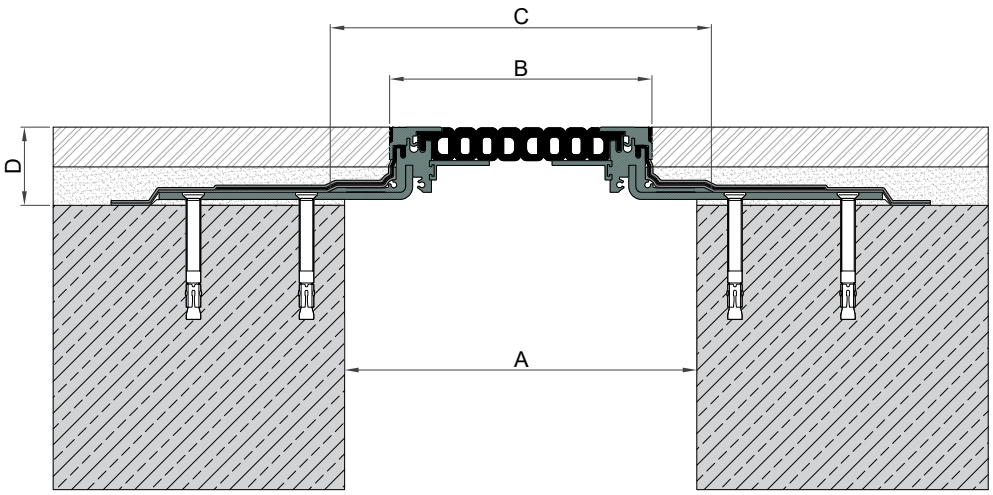

Drawing references correspond to the dimension schedule. Original geometry retained.

Source PDF page 142

UWTP-C

WATER PROOF EXPANSION JOINT FLOOR TO FLOOR 2 - 12 in [50 - 300 mm] Expansion Joint Width



SECTION DETAIL

UWTP 50C

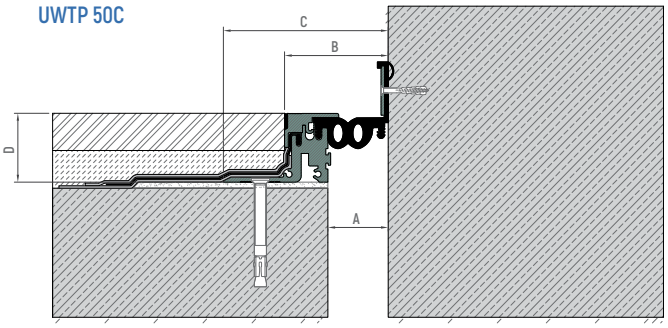

UWTP 85C

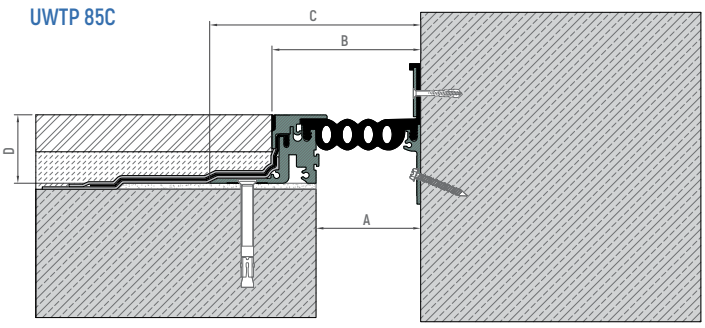

IMPERIAL DIMENSION SCHEDULE

Continued on page 179

Source PDF page 143

UWTP-C

FRACTIONAL INCHES / ORIGINAL MILLIMETERS IN BRACKETS

Type	Nominal Joint Width A	Visible Width B	Installation Width C	Installation Height D	Total Movement	Load Capacity
UWTP 50C	2 [50]	3 3/8 [86]	5 3/8 [137]	2 3/16 [55.5]	1 31/32 (+63/64-63/64) [50 (+25-25)]	Vehicle
UWTP 85C	3 3/8 [85]	4 3/4 [121]	6 3/4 [172]	2 3/16 [55.5]	2 23/64 (+1 3/8-63/64) [60 (+35-25)]	Vehicle
UWTP 100C	4 [100]	5 3/8 [136]	7 3/8 [187]	2 3/16 [55.5]	3 11/32 (+1 49/64-1 37/64) [85 (+45-40)]	Vehicle
UWTP 150C	6 [150]	7 3/8 [188]	9 7/16 [239]	2 3/16 [55.5]	3 15/16 (+1 31/32-1 31/32) [100 (+50-50)]	Vehicle
UWTP 200C	8 [200]	8 3/8 [212]	10 3/8 [263]	2 3/16 [55.5]	4 23/32 (+2 23/64-2 23/64) [120 (+60-60)]	Vehicle
UWTP 250C	10 [250]	9 5/16 [237]	11 5/16 [288]	2 3/16 [55.5]	5 33/64 (+2 3/4-2 3/4) [140 (+70-70)]	Vehicle
UWTP 300C	12 [300]	10 5/16 [262]	12 5/16 [312]	2 3/16 [55.5]	6 19/64 (+3 5/32-3 5/32) [160 (+80-80)]	Vehicle

Dimensions and movement values are converted from the source schedule. Model identifiers, material grades and traffic categories are unchanged.

Source PDF page 143

UWTP-C

WATER PROOF EXPANSION JOINT FLOOR TO WALL 2 - 12 in [50 - 300 mm] Expansion Joint Width

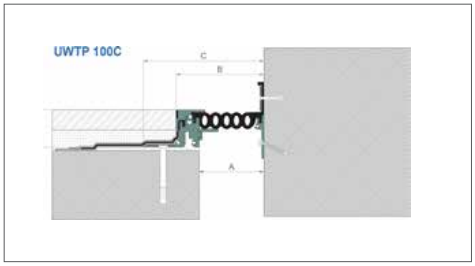

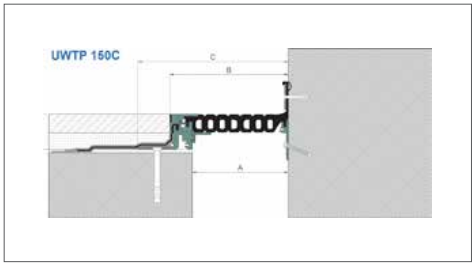

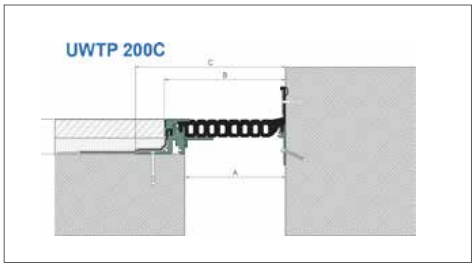

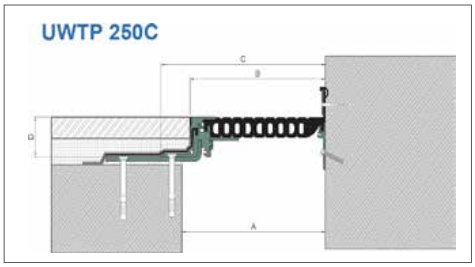

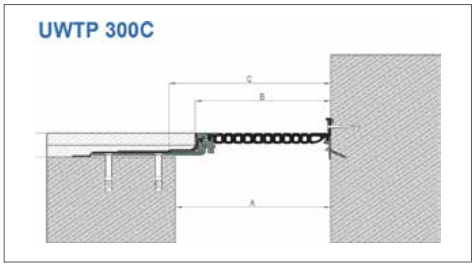

Original manufacturer arrangement details. Model identifiers and embedded drawing annotations are retained.

Source PDF page 144

EPDM MEMBRANE

Flexible membrane.

For floors and walls below expansion-joint covers.

Property / condition	Imperial / value	Metric source
Nominal application gap range	1 - 16 in	25-400 mm
Material / color	Nonreinforced cured EPDM / black	Unchanged
Temperature range	-31 to 212 °F	-35 to 100 °C
Hardness / ISO 7619	70 ± 5 Shore A	70 ± 5 Shore A
Specific gravity / ISO 2781	1.18 ± 0.05	1.18 ± 0.05
Tensile strength, minimum / ISO 37	Source unit requires confirmation	100 kg/cm^2
Elongation at break, minimum / ISO 37	300%	300%
Compression set, maximum / ISO 815	35%; 22 h at 212 °F	35%; 22 h at 100 °C
Accelerated aging / ISO 188	24 h at 212 °F	24 h at 100 °C
Hardness change / ISO 7619	±5 Shore A	±5 Shore A
Tensile strength change, maximum / ISO 37	-15%	-15%
Elongation change, maximum / ISO 37	-25%	-25%

The source tensile-strength unit is reproduced exactly. It is not treated as kgf/cm^2 without confirmation.

CHEMICAL RESISTANCE

EPDM & vapor barrier

Exposure	EPDM membrane	Vapor barrier
UV	Excellent	Excellent
Water	Excellent	Excellent
Acids	Fair	Fair
Alkalis	Fair	Fair
Aliphatic hydrocarbons	Fair	Fair
Hydraulic oils	Good	Good
Fuels	Fair	Fair
Weathering	Excellent	Excellent
Oxidative aging	Good	Good

Qualitative resistance descriptions are retained from the source catalogue and do not introduce a new test result.

ALUMINUM / EN AW-6063-T6

Material properties.

Manufacturer source identifies DIN EN 573-1.

Property / condition	Imperial / value	Metric source
Density	0.0975 lb/in^3	2.70 g/cm^3
Young's modulus	10,008 ksi	69 GPa
Thermal expansion coefficient	13.0 x 10^-6 /°F	23.4 x 10^-6 /K
Thermal conductivity	109.8-127.1 Btu/(h·ft·°F)	190-220 W/(m·K)
Electrical conductivity	28-34 MS/m (SI retained)	28-34 MS/m
Material condition	T6	T6
Melting temperature	1,220 °F	660 °C
Tensile strength Rm, minimum	35.535 ksi	245 MPa
Rp0.2 strength, minimum	29.008 ksi	200 MPa
Elongation A5	8%	8%
Elongation A50 mm	6%	6%
Published material fire description	Nonflammable, class A1 (source)	Nonflammable, class A1

ALUMINUM / EN AW-6063-T6

Composition & processing.

Element / group	Published composition
Si	0.20-0.60
Mg	0.45-0.90
Fe	0.35
Cr	0.10
Cu	0.10
Zn	0.10
Mn	0.10
Ti	0.10
Other elements, each	0.00-0.05
Other elements, total	0.00-0.15

Technological property	Source description
Normal-atmosphere resistance	Very good
Marine-atmosphere resistance	Very good
Weldability	Very good
Machinability	Sufficient
Extrudability	Very good
Protective anodizing	Very good

EPDM RUBBER

Published test properties.

Source reference: ASTM D3568-03(2022).

Property / condition	Imperial / value	Metric source
Hardness / ASTM D2240	70 ± 5 Shore A	70 ± 5 Shore A
Tensile strength, minimum / ASTM D412	1,305 psi	9 MPa
Elongation at break, minimum / ASTM D412	220%	220%
Tear strength, minimum / ASTM D624	142.754 lbf/in	25 kN/m
Density / ASTM D297	0.0470 ± 0.0018 lb/in^3	1.30 ± 0.05 g/cm^3
Compression set, maximum / ASTM D395	28%; temperature notation unresolved	22 h @ 1000 °C as printed
Hot-air aging condition	96 h; temperature notation unresolved	96 h @ 700 °C as printed
Hardness change, maximum / ASTM D573	±10 Shore A	±10 Shore A
Tensile strength change, maximum / ASTM D573	-20%	-20%
Elongation change, maximum / ASTM D573	-25%	-25%
Dry-heat temperature range	-40 to 266 °F	-40 to 130 °C

The source temperature notation for compression set and heat aging needs manufacturer clarification; no corrected test temperature is inferred.

EPDM RUBBER

Chemical resistance.

Exposure	Source description
UV & ozone	Excellent
Weather	Excellent
Water swell	Very good
Thermal aging	Excellent
Chemicals	Excellent
Mild acids	Good
Alcohol	Good
Petroleum and mineral oils	Poor

VAPOR BARRIER

Membrane protection.

Source identifies a high-density polyethylene membrane.

Property / condition	Imperial / value	Metric source
Nominal application gap range	2 - 16 in	50-400 mm
Membrane thickness	1/16 in, approx.	1.5 mm
Published temperature range	95-212 °F	35-100 °C
Hardness / ISO 7619	75 ± 2 Shore A	75 ± 2 Shore A
Specific gravity / ISO 2781	1 ± 0.05	1 ± 0.05
Tensile strength, minimum / ISO 37	1,160 psi	8 N/mm^2
Elongation at break, minimum / ISO 37	600%	600%
Compression set, maximum / ISO 815	48%; 22 h at 212 °F	48%; 22 h at 100 °C

The lower temperature bound is positive 35 °C in the source vapor-barrier page. Confirm the intended range rather than substituting the EPDM membrane range.

HORIZONTAL JOINTS

Protection within the joint.

Nexus horizontal fire-barrier arrangements combine stainless steel foil and insulation within the expansion joint. The published source describes a two-hour floor-to-floor application; select and verify the complete tested assembly for the project.

Item	Imperial / value	Metric source
Nominal gap range	1 3/8 - 14 in	35-350 mm
Stainless steel lamination	1/512 in, approx.; AISI 304	0.05 mm; AISI 304
Stated melting point	2,552 °F	1,400 °C
Core density	7.991 lb/ft^3	128 kg/m^3
Standard production length	9 ft 10 1/8 in	3 m
Published movement	Minimum 50% of joint width	Minimum 50%
Published fire-rating reference	2 hours / 120 minutes; UL 2079	2 hours / 120 minutes

The source also describes a layered stainless steel and insulation assembly with up to 50% lateral shear. Use the supporting documentation for the selected orientation, gap, movement and fixing detail.

Source PDF page 146

SELECTION SCHEDULE

Floor-to-floor barriers.

Source model code	Nominal gap width	Movement
NFB - 2FF	1 3/8 in [35 mm]	±50%
NFB - 2FF	2 in [50 mm]	±50%
NFB - 4FF	4 in [100 mm]	±50%
NFB - 6FF	6 in [150 mm]	±50%
NFB - 8FF	8 in [200 mm]	±50%
NFB - 10FF	10 in [250 mm]	±50%
NFB - 12FF	12 in [300 mm]	±50%
NFB - 14FF	14 in [350 mm]	±50%

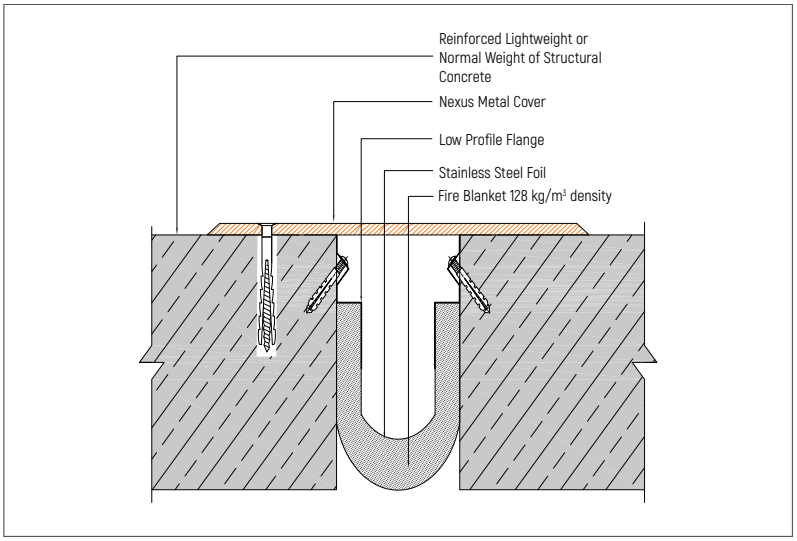





The source assigns NFB - 2FF to both 35 mm and 50 mm gaps. Confirm the required designation. Low-profile and surface-mount flange options are listed in the source.

Source PDF page 147

SOURCE CLARIFICATIONS

Items to confirm before release.

UFSJ-X / UFSJ-XC

The load schedule states “UPTO 2500” without a unit. No pound-force rating is inferred.

NPR WATER BARRIER

The introduction gives a 120-225 mm gap range; the system options and schedule extend to 250 mm. The variant schedule is retained.

UWTP-C ORIENTATION

The schedule page says floor-to-floor; the following corner-arrangement page says floor-to-wall. Confirm the intended application.

NPS 100C MOVEMENT

The source seismic entry “120 (40-80)” has no plus sign before 40. Its notation is retained, without assuming a correction.

EPDM TENSILE UNIT

The source states 100 kg/cm^2. Confirm whether a force-based unit was intended before publishing a psi equivalent.

RUBBER TEST TEMPERATURES

Compression-set and hot-air-aging conditions are printed as 1000 °C and 700 °C. Confirm the notation before converting those test conditions.

VAPOR-BARRIER TEMPERATURE

The source prints 35-100 °C, while the EPDM membrane page gives -35-100 °C. The material-specific published values are retained.

FIRE-BARRIER DESIGNATIONS

NFB - 2FF is repeated for the 35 mm and 50 mm gaps. Confirm model selection and current assembly-specific supporting evidence.

THE DETAIL. BRINGS IT TOGETHER.

Architectural expansion joints.
Movement solutions.
A considered finish.

nexus-ikk.com

UNITECH / IKK GROUP